# EXISTING CONDITIONS INSPECTION AND ALTERNATIVES ASSESSMENT REPORT

## COUNTY ROUTE 25A, STUYVESANT FALLS BRIDGE OVER KINDERHOOK CREEK
## BIN 3342250

## COLUMBIA COUNTY
## Stuyvesant Falls, New York

Prepared for:
Columbia County Department of Public Works
PO Box 324 – 1789 Route 23B
Hudson, New York 12534

May, 2014

Prepared by:
Matt Yerkey, P.E.
Neil Weisel, P.E.
David MacGregor, P.E.
Ryan-Biggs Associates, P.C.
257 Ushers Road
Clifton Park, New York 12065

# TABLE OF CONTENTS

PAGE

EXECUTIVE SUMMARY ..... iii

INTRODUCTION ..... 1

BACKGROUND AND HISTORIC INTEGRITY ..... 2

OBSERVATIONS ..... 4

CONCLUSIONS, LOAD RATING AND LOAD POSTING ..... 51

PROJECT OBJECTIVES ..... 54

ALTERNATIVES ..... 55

OPINION OF PROBABLE PROJECT COST ..... 60

RECOMMENDATIONS ..... 65

APPENDIX A: LOCATION MAP

APPENDIX B: RECORD DRAWINGS

APPENDIX C: LOAD RATING AND LOAD POSTING

APPENDIX D: ALTERNATIVE SKETCHES

# EXECUTIVE SUMMARY

Based on the authorization of the Columbia County Department of Public Works, Ryan-Biggs Associates, P.C., (Ryan-Biggs) has completed an Existing Condition Inspection and Alternatives Assessment of the Stuyvesant Falls Bridge (BIN 3342250) on Columbia County Route 25A over Kinderhook Creek in Stuyvesant, Columbia County, New York.

The purpose of this report is to document the comprehensive, hands-on field inspection and existing condition observations, perform load rating calculations, develop objectives, assess all feasible alternatives and develop opinions of probable project cost. This report will be considered by the County in determining future course(s) of action at this particular bridge site. Final designs, permits, and Right-of-Way mapping were not included in the work scope of this study. A list of future steps necessary to progress the project is also provided. Project objectives for the bridge crossing have been summarized as to provide an aesthetically pleasing structure while eliminating the structural deficiencies of the existing bridge, providing a structure capable of supporting unposted legal truck loads, limiting environmental impacts, and significantly minimizing maintenance efforts, future repairs, and costs.

Findings

- The superstructure is in poor condition, requires corrective action.
- Undertaking a major repair option including painting meets many of the project objectives but will inevitably require difficult and costly levels of routine and cyclical maintenance and future painting and repairs.
- Undertaking a complete bridge replacement project meets many of the project objectives but will require significant public and historic input.

Rating

- Based on existing conditions the bridge has an Inventory rating of HS6.33 and an Operating rating of HS 14.13. The Inventory Rating is based on a factor of safety used for repeated use over the design life of the bridge. The Operating rating is based on a reduced factor of safety that is suitable for rare overweight vehicles or limited, repeated loads over a duration of a few weeks or months.
- Based on existing conditions, the bridge should be posted for 12 tons with an R-Permit Restriction. The deteriorated condition of several critical structural components limit the live load capacity of the bridge to a point where HS 20 (a standard truck with a design weight of 36 tons) cannot be supported within the Code-prescribed allowable limits. The maximum vehicle weight that can be supported within the Code-prescribed allowable limits is 12 tons. This load rating is an Operating rating which can be supported for a limited duration but will deteriorate the bridge structure at an increased rate. An R-Permit Restriction prohibits overweight vehicles with a permit from using the bridge.

## Cost Summary

- Our Opinion of Probable Project Cost for the bridge is based on 2013 dollars and depends on the alternatives selected. The initial cost range is between $3,600,000 and $7,300,000. The 50-year life cycle cost range is between $6,500,000 and $12,700,000.
- Inflation factors should be applied to the cost range to account for when the funds might realistically be obtained. Life cycle costs have been summarized and should be considered when selecting the alternative since a particular option may have the lowest initial cost but have the highest lifetime cost.

## Future Steps

- Meet with Ryan-Biggs and other interested parties to review report and select a preferred alternative or general course of action.
- Secure funding.
- Retain the services of an Engineering team to perform final surveying and geotechnical, environmental, and structural designs.

# INTRODUCTION

At the request of the Columbia County Department of Public Works, Ryan-Biggs Associates, P.C. (Ryan-Biggs), has completed an in-depth condition assessment and prepared this report to allow the County to determine potential future action at this bridge location.

The purpose of this project is to evaluate the condition of the existing bridge, prepare load rating calculations based upon its current condition, develop alternatives, and make recommendations for feasible rehabilitation options or complete replacement of the bridge.

The New York State Department of Transportation (NYSDOT) recently issued two yellow structural flags as a result of the biennial condition inspection performed in November, 2013. One yellow flag was issued for bottom chord deterioration, and the other yellow flag was issued for broken welds at the lateral bracing connections between the trusses.

Our evaluation and report includes the following:

1. Review information related to the project, including bridge inspection reports, specifications, and drawings of original structure and previous repairs and rehabilitation work.

2. Perform visual, "hands on" observations of all bridge superstructure elements and both substructures. Ryan-Biggs personnel visited the site on June 12, June 20, June 21, and June 22, 2013, to observe and photograph the bridge. Observations were performed from the bridge deck, each abutment, a snooper truck that allowed access to the underside of the bridge, and a lift truck that allowed access to the upper truss and arch members. No samples were taken, and no material testing or non-destructive testing (NDT) was performed.

3. Prepare a condition assessment of all bridge superstructure elements. The extent of deterioration was estimated using tape measures, a micrometer, an electronic thickness meter, and wire brushes and similar hand tools.

4. Analyze the existing bridge structure to determine its load rating based upon the observed condition of the members and connections. Also, prepared load posting recommendations based upon the results of the load rating.

5. Develop project objectives and prepare alternatives including various levels of repairs and rehabilitation, up to and including complete replacement of the bridge.

6. Prepare an opinion of probable construction cost for the alternatives.

7. Make recommendations based on how well the alternatives meet the project's objectives.

8. Prepare and submit to the County this report which summarizes the observed conditions, load rating and load posting recommendations, project objectives and alternatives, opinion of probable construction costs, and recommendations for repair or replacement.

# BACKGROUND AND HISTORIC INTEGRITY

The Stuyvesant Falls Bridge carries Columbia County Route 25A over Kinderhook Creek in Stuyvesant, Columbia County, New York. See Appendix A for a location map. County Route 25A runs approximately south to north and connects the hamlet of Stuyvesant Falls to State Route 9. The bridge is listed as an element of the Stuyvesant Falls Mill District, which was awarded the status of a National Historic District in 1976.

The bridge supports a single lane of vehicular traffic and clear spans approximately 203 feet between stone masonry abutments. The trusses are 19′-8″ apart and the travel lane is 15′-2″ curb-to-curb, and there is an approximately 4′-6″ wide sidewalk on the east/upstream side of the bridge. The concrete bridge deck is approximately 25 feet above the bedrock riverbed. The abutments appear to be the original stone, although repairs have been made to them and concrete caps were added in 1992. The wing walls are also of stone but are constructed of less substantial stones than the abutments and have experience some minor settlement.

The bridge is situated between the upper and lower falls of Kinderhook Creek, with the lower falls being approximately 100 feet downstream of the bridge. The water level in the Kinderhook Creek ranges from several feet deep for the full width of the creek to only a few narrow streams between rock outcroppings in the streambed during the drier periods of the year.

The bridge was constructed in 1899 and has undergone major modifications to repair and replace various original members and add new members to strengthen the trusses and bridge deck.
A brief history of the bridge is as follows:

- The bridge was originally constructed in 1899 by the Berlin Iron Bridge Company of East Berlin, Connecticut, primarily using wrought iron.
- Circa 1939, the original wooden deck was replaced with open steel grating, and new stringers and additional truss cross bracing were added.
- In 1979, a bridge inspection revealed an unattached bottom chord in the east truss adjacent to the bearing at the south abutment. Repair of this member and repair and reinforcing of several other members were completed in 1980.
- In 1990, the bridge was closed because of severe deterioration of several connections. The bridge was repaired and reopened in December 1990.
- In October 1991, the bridge was closed again because of additional deterioration of connections.
- In 1992, the Town of Stuyvesant and Columbia County decided to perform a major rehabilitation of the bridge using an arch/hanger/floor beam reinforcement system, which included additional floor beams and a new concrete-filled grating bridge deck. Design and drawings were performed and prepared by BKLB, Inc. and Ryan-Biggs Associates, P.C. In 1993, horizontal steel plates were installed at the deck level in an effort to protect the floor beams and truss bottom chords from water, snow, and deicing salts.
  The 1992 rehabilitation included the installation of the arch, which acts as a second structural system and shares dead loads and live loads with the original

trusses. Neither the arches nor the trusses are designed to resist the combined bridge weight and traffic loads. The load path of the bridge is the traffic loads on the bridge deck are transferred to the floor beams, which are supported by the arches and trusses. The arches and trusses are supported by the bearings at each abutment.

There are no original 1899 construction drawings; however, design and shop fabrication drawings from the 1992 rehabilitation project are available. See Appendix B for drawings showing the bridge plan, elevations, section taken from the 1992 rehabilitation project drawings. These drawings show the bridge geometry and the primary member sizes.

The Stuyvesant Falls Bridge is listed as an extant structure of the Stuyvesant Falls Mill District, which was added to the National Register of Historic Places in 1976.

The bridge is one of many surviving iron bridges that were built by the Berlin Iron Bridge Company of Berlin, Connecticut. It is a modified Pratt through truss bridge, not a parabolic or lenticular truss bridge for which the company is better known. The bridge has undergone significant alterations and modernizations over the past 75 years, reducing the historical integrity of the bridge design, construction, and materials.

Circa 1939, the original wooden deck was replaced with steel grating and several floor beams were replaced, most likely with steel beams.

Circa 1980 or 1990, angle reinforcing was added to the existing floor beams near the top and bottom flanges to increase strength and stiffness.

In 1992 and 1993, significant structural repairs and improvements were made due to continuing deterioration and safety concerns. The effects on the historic integrity include:

- A steel reinforcing arch with post-tensioned rods at the bottom chords was installed at both trusses, significantly altering the overall aesthetic appearance and structural behavior of the bridge.
- Steel hanger rods and floor beams were installed between each existing truss panel point, resulting in twice as many hangers and floor beams as in the original truss design.
- A concrete-filled, steel grating bridge deck and granite curbs were installed to replace the open steel grating installed in 1939. The steel stringers between the existing floor beams were removed to install the new deck.
- Steel horizontal steel plates were installed at the deck level, altering the appearance of the bridge.
- Lateral rod bracing between the truss top chords were replaced with steel angles.

Several original features, including the overall profile of the original truss, are visible, including:

- Original truss members, hangers, and connections above the bridge deck.
- Original stone abutments.
- Distinctive features typical of Berlin Iron Bridge Company projects such as the decorative sidewalk railings and the original construction plaque and decorative portal framing above the roadway at each end of the truss.

# OBSERVATIONS

The following describes our observations of the bridge's substructure and superstructure which we made during site visits on June 12, June 20, June 21, and June 22, 2013.

These observations are based on visual and "hands on" observations of all of the various bridge structural superstructure elements. Observations were performed from the bridge deck, each abutment, a snooper truck that allowed access to the underside of the bridge, and a lift truck that allowed access to the upper truss and arch members. No removals of existing soil, wearing surfaces, or structural elements were performed to allow observation of hidden elements, and the depth and high flows of the Kinderhook Creek during our site visits prevented access from the riverbed. No samples were taken, and no material testing or non-destructive testing (NDT) was performed.

The truss members and joints labels called out in this report use the same designations as in the NYSDOT Bridge Biennial Inspection Report. The Bridge Identification number (BIN) placard is at the south abutment, which is called the "Begin" Abutment or Joint L0; the north abutment is called Joint L12; the upstream/east truss is called the Right Truss (R); and the downstream/west truss is called the Left Truss (L). The joints at the top chord are called Upper (U), at the Arch (A), at the Mid-Level (M), and at the bottom chord/Lower (L). These joint labels are also shown in the bridge elevation drawing in Appendix B, and in the bridge elevation sketch in Appendix C.

**<u>Substructures</u> (Original 1899/1992 Rehabilitation)**

1. The streambed consists of rock outcroppings as shown in Photograph 1. No signs of excessive siltation or scour were observed. Flow appears to occur primarily at the north and south ends during low flow periods as there is a higher outcropping in the center of the stream. Reportedly, the level of the river varies significantly throughout the year, but never approaches the elevation of the bridge deck. There were no signs of debris collected at the upstream corners. The bridge is not known to have been overtopped.

**Photograph 1**

2. The substructures/abutments, including the wing walls on the upstream side, are mortared stone masonry construction and are the original 1899 substructures. They

are in fair condition with local areas of wear, missing mortar, and seepage from behind the abutments noted. See Photographs 2 and 3. Due to the high water level and flows during our visits, it was not possible to perform a hands-on evaluation of the stones at the level of the riverbed. Repointing was part of the 1992 bridge rehabilitation and was observed to be in overall good condition.

**Photograph 2 – South Abutment**

**Photograph 3 – North Abutment**

3. Each of the four wing walls are mortared stone masonry and appear to have been built directly on the bedrock. They are in fair condition except for local areas near the waterline as shown in Photograph 4. Along the downstream side of the north abutment, there is an area that appears to have been undermined and has partially collapsed as shown in Photograph 5. This area is about 40 feet downstream of the bridge and does not affect the bridge abutment. Due to the high water level and flows during our visits, particularly at the north abutment, it was not possible to perform a hands-on evaluation of the wing walls.

The approach embankments are in good condition at each of the four quadrants.

**Photograph 4 – Southwest Wing Wall**

**Photograph 5 – Northwest Wing Wall**

4. The stone at the bridge seat under the right truss bearing at the South Abutment is cracked. The crack does not extend to the stone courses below, and does not extend into the concrete pedestal above and the bearing capacity of the abutment does not appear to be adversely affected. See Photograph 6.

**Photograph 6**

5. In 1992, reinforced concrete caps were placed at the top of the abutment stems, with new concrete pedestals at the bridge bearings and new concrete backwalls. These concrete components are in good condition.

**<u>Truss Top Chord, End Posts, and U Joints</u> (Original 1899 construction)**

1. Joints R-U1 and L-U1: At these joints, the double channel top chord is spliced with riveted web gusset plates and with a riveted top bent cover plate. The web gusset plates are connected with a pin which also connects the truss vertical and diagonal web members. Surface rust and pack rust was observed under the top bent cover plate at the joint as shown in Photograph 7. At the Left Truss, the pin at the inside face of the chord does not extend fully to the outside face of the nut. Also, the pin nuts are not tight to web plates. See Photographs 8 and 9.

**Photograph 7**

**Photograph 8**

**Photograph 9**

2. Joints R-U11 and L-U11: This joint configuration is similar to Joint U1. Observations include pack rust, deformation, and deterioration of top bent cover plate; broken bolts at the top cover plate; surface and minor pack rust at the web plates at L-U11; rust jacking at web plate at R-U11; the pin does not extend fully to the outside face of the nut; and the pin nuts are not tight to web plates. See Photographs 10, 11 and 12.

**Photograph 10**

**Photograph 11**

**Photograph 12**

3. Joints R-U2, L-U2, R-U4, L-U4, R-U6, L-U6, R-U8, L-U8, R-U10, L-U10: At these joints the top chord channels are continuous and the vertical truss web angles are riveted to the channel webs. There are no truss diagonals at these joints. Minor surface rust was typically observed as shown in Photograph 13.

**Photograph 13**

4. Joints R-U3, L-U3, R-U5, L-U5, R-U7, L-U7: At these joints, the double channel top chord is spliced with riveted web gusset plates and with a riveted top cover plate. The web gusset plates are connected with a pin which also connects the truss vertical and diagonal web members. At these locations, minor surface rust and minor pack rust at web gusset plates was typically observed. Also, there is some moderate pack rust at the top cover plates. See Photographs 14 and 15.

**Photograph 14**

**Photograph 15**

5. Joints R-U9: This joint configuration is similar to Joints U3, U5, and U7, with the riveted top cover plate bent to form the geometry of the truss. At R-U9 there is moderated pack rust at the top cover plate and minor pack rust at web plates. A poor quality weld was made along the edge of the top cover plate. See Photographs 16 and 17.

**Photograph 16**

**Photograph 17**

6. Joint L-U9: This joint configuration is similar to Joint R-U9. There is moderate pack rust at both the top cover plate and the web plates except at the outside web plate near the bottom of the plate where there is severe pack rust. This pack rust has separated the plate from the channel web and one of the rivets is broken. See Photographs 18 and 19.

**Photograph 18**

**Photograph 19**

7. Top chord built-up members: Members are built-up from two channels, a continuous top plate, and bottom lacing bars riveted together. There is significant pack rust and rust jacking between the riveted top plate and the top flange of the channels typically through-out as shown in Photographs 20 and 21. No broken rivets were noted, but many are prying due to rust jacking and the top plate is locally bent between the rivets.

**Photograph 20**

**Photograph 21**

8. Truss end posts, Members L-U11-L12, and R-U11-L12: The bottom lacing bars have moderate surface rust, with moderate pack rust where the lacing bars are riveted to the channel flange, and many of the lacing bars are bent as shown in Photograph 22.

**Photograph 22**

9. At Member R-U11-U12, the bottom flange of the inside channel is bent, probably due to impact damage as shown in Photograph 23.

**Photograph 23**

**<u>Arch and A Joints</u> (1992 Rehabilitation)**

1. Joints R-A0.5, L-A0.5, R-A1.5, L-A1.5, R-A2.5, L-A2.5, R-A3.5, L-A3.5, R-A4.5, L-A4.5, R-A5.5, L-A5.5, R-A6.5, L-A6.5, R-A7.5, L-A7.5, R-A8.5, L-A8.5, R-A9.5, L-A9.5, R-A10.5, L-A10.5, R-A11.5, L-A11.5: Two vertical hanger rods are attached at these joints which support the floor beams added in 1992 which are located between the original bridge floor beams. At these locations only light to moderate surface rust was observed with little section loss. See Photographs 24 and 25. Note the missing bolts in the top batten plate between the arch channels at Joint R-A8.5. Very few missing bolts were observed, and this is not a typical condition; however, there is also a missing bolt in the batten plate at Joint L-A8.5. Regardless, it is not known whether or not the missing bolts were ever installed.

**Photograph 24**

**Photograph 25**

2. Joints R-A1, L-A1, R-A2, L-A2, R-A3, L-A3, R-A4, L-A4, R-A5, L-A5, R-A6, L-A6, R-A7, L-A7, R-A8, L-A8, R-A9, L-A9, R-A10, L-A10, R-A11, L-A11: At these locations, the arch channels are spliced with either shop welded or fielded bolted web plates and top and bottom cover plates. At the odd numbered joints, the existing double channel truss vertical members are bolted to the arch channel as shown in Photograph 26. At the even numbered joints, the existing truss 4-angle vertical members and 4 vertical hanger rods are bolted to the arch. The 4 hanger rods are continuous down to and support the floorbeams below. See Photographs 27 and 28. At each of these joints there is minor surface rust, and small areas of heavier surface rust at the failed paint areas, with little section loss.

**Photograph 26**

**Photograph 27**

**Photograph 28**

3. At a few locations (L-A8.5-L8.5, R-A8.5-L8.5 and R-M5.5-L5.5) the hanger rods which were added in 1992 are slightly offset from vertical to go around, and rub against lacing bars of the truss members. At some locations (for example at Joint R-M3.5) lacing bars have been removed to prevent this. See Photographs 29 and 30.

**Photograph 29**

**Photograph 30**

4. Member L-L0-A0.5: The channel on the roadway side of the arch near the bridge deck has rust delaminations with a loss of about 1/8-inch from the original 11/16-inch web thickness. This same condition was observed at Member L-A11.5-L12, but to a lesser extent. See Photographs 31 and 32. Also, the inside surface between the arch channels at this location has heavy surface rust but with little section loss as shown in Photograph 33.

**Photograph 31**

**Photograph 32**

**Photograph 33**

**<u>Truss Web Members and M Joints</u> (Original 1899 / 1992 Rehabilitation)**

1. The vertical 4 angle truss member R-A8-M8 is slightly bent due to an offset between Joints A8 and M8 as shown in Photograph 34. The offset between the joints is about 2 inches. The hanger rods rub against the vertical repair plates added in 1980 at Joint R-M8. No other distress appeared to be associated with this condition, and the reason for this offset is unclear.

**Photograph 34**

2. Joints R-M2, L-M2, R-M10, L-M10. At these pinned joints, the truss vertical and diagonal web members are connected, and there is no horizontal mid-height web member. There is light surface rust with light to moderate pack rust at these joints as shown in Photograph 35, except at Joint R-M2 where the inside gusset plate is almost entirely rusted through with heavy pack rust at the pin nut as shown in Photograph 36.

**Photograph 35**

**Photograph 36**

3. Joints R-M4, L-M4, R-M6, L-M6, R-M8, L-M8: The vertical, diagonal, and horizontal truss member are pinned together. These joints were upgraded in 1992 with bolted gusset plates between the pins and the truss channel and angle members. There is light surface rust and light pack rust at these locations as shown in Photograph 37.

**Photograph 37**

4. Joints R-M3, L-M3, R-M5, L-M5, R-M7, L-M7, R-M9, L-M9: The vertical double channels are continuous and the horizontal channels are riveted to gusset plates which are riveted to the vertical channels. There is light surface rust and light pack rust at these joints as shown in Photograph 38.

**Photograph 38**

5. Member R-M10-L9: This diagonal consists of 2 bars 7/8-inch x 3 inches, and the inside bar is bent about 1 inch just above the deck probably due to impact damage, as shown in Photograph 39. This condition was noted in previous inspections dating back to 1980, and no other distress was observed. This is a tension member and this condition is not structurally significant.

**Photograph 39**

6. Overall, the truss web members are in good condition with minor surface rust, except for the deterioration at the joints as described above. However, at a few location at the double channel members, moderate pack rust was observed at the connections of the lacing bars. Also, at a few locations the double channel vertical

members were previously repaired using either bolted or welded connections just above the deck. Other than surface rusting and minor to moderate pack rust, no distress was observed at these repairs. See Photograph 40 and 41.

**Photograph 40**

**Photograph 41**

**<u>Lateral Bracing between the Trusses above the Bridge Deck</u> (Original 1899/1980 or 1990/1992 Rehabilitation)**

Vertical lateral bracing occurs between the trusses at each of the original truss panel points. At Panel Points U1 and U11, this bracing consists of ornamental portal framing made from riveted bars and angles. At Point Points U2, and U10, inverted V bracing is used, and at the remaining panel points, X bracing is used. In addition, horizontal X

bracing in the plane of the top chord occurs between the trusses from Panel Points U1 to U11.

Circa 1980 or 1990, new vertical bracing angles were added to the existing rod vertical braces and new horizontal bracing angles were added to the existing rod horizontal braces between the top chords of the trusses. These bracing angles were welded to the original truss members. The original vertical bracing which provides the portal framing at each end of the bridge, at Panel Points U1 and U11, was not modified.

In 1992, the existing horizontal rod braces were removed, and the previously installed horizontal angles were bolted to the top chord of the trusses.

1. Portal framing between the right and left trusses at U1 and U11: Light to heavy rust at connections and angle legs that trap and hold water. In addition, deteriorated portion of outstanding leg of connection angle at Joint U11 at the left truss. See Photographs 42 and 43.

**Photograph 42**

**Photograph 43**

2. Vertical sway braces between the trusses at Panel Points U2 and U10: There is surface rusting with heavier surface rusting at the angle horizontal legs, but with little section loss. There is heavy pack rust and rust jacking at center gusset plates at both Panel Points U2 and U10 which have broken the welds, leaving the center gusset plates disconnected from the brace angles, as shown in Photograph 44.

**Photograph 44**

The welds at the gusset plates to the vertical truss members are poor quality with porosity and undercutting. The following conditions were observed:

- At Member L-U2-A2, the weld is cracked for over half its length. NYSDOT issued a yellow flag in November 2011 for this cracked weld. There is also heavy pack rust at this gusset plate. See Photograph 45.
- At Member R-U10-A10, the weld is cracked for almost its entire length as shown in Photograph 46.
- At Member L-U10-A10, the weld was installed on only one side and the weld is poor quality with porosity and undersized as shown in Photograph 47.

**Photograph 45**

**Photograph 46**

**Photograph 47**

3. Vertical lateral braces between the right and left trusses at U3, U5, U7, and U9: At these locations the added angle X bracing is welded directly to the flanges of the vertical double channel truss members. The original rod X bracing at the horizontal struts at the top and bottom of the X bracing remain. The horizontal struts are made from 4 angles riveted together with lacing bars. There is light surface rusting on these members with moderate pack rust at the strut's riveted connections, as shown in Photograph 48. There was no observed distress at the welds, however, at many locations the welds undercut the channel flanges as shown in Photograph 49.

**Photograph 48**

**Photograph 49**

4. Vertical lateral braces between the right and left trusses at U4, U6, and U8: At these locations the ends of the vertical angle X bracing is welded to a gusset plate which is welded to the truss vertical 4 angle members. There is a top horizontal strut between the trusses similar to the odd numbered panel points, but these is no bottom horizontal strut. The condition of these members is similar to the bracing members at the odd numbered panel points. However, the welds at the gusset plates to the vertical truss members are poor quality with porosity and undersized as shown in Photograph 50.

**Photograph 50**

5. Horizontal X bracing between truss top chords: These single angle members had areas with light surface rust and no distress was observed at their connections. One of the angles between Panels Points U1 and U2 is slightly bent. See Photographs 51 and 52.

**Photograph 51**

**Photograph 52**

**<u>Truss Bottom Chords and Arch Post-Tension Rods</u> (Original 1899 / 1980 or 1990 Repairs / 1992 Rehabilitation)**

The truss bottom chord consists of a double channels with lacing bars at the first three bottom chord panels at each end of the truss, at Joints L0 to L3, and L9 to L12. The remaining bottom chord consists of wrought iron eye bars which are 2 panels long and are pinned to the channels at Joints L3 and L9 and are pinned together at Joints L5 and L7.

The typical bottom chord connection consist of a round, iron pin that is threaded to a smaller diameter at the ends for the nut. All of the floor beams are supported by hangers installed in 1992 and do not rely on the original pins for gravity loads. However, the bottom chord tension loads and web diagonal loads are transferred through the pins. Typically, there is moderate pack rust and a minimum 10 percent section loss is assumed at all of the connections. However, at some locations the rust is more severe with greater section loss and these locations are as follows:

1. Joints R-L3, L-L3: The bottom chords double channels are pin connected to the eye bars at this location. Holes are drilled in the channel web for the pin, and plates are riveted to the channel web to reinforce the pin holes. There is heavy pack rust at the channel web and at the riveted plates. The joint at the right truss is more heavily rusted than at the left truss, with an estimated 67 percent reduction at the channel web, and 33 percent reduction at the plates. Also, there is about a 1/8 inch loss in the eye bar thickness at the pin. See Photograph 53 at Joint R-L3, and Photograph 54 at Joint L-L3.

**Photograph 53**

**Photograph 54**

2. Joints R-L9, L-L9: This joint configuration is similar to Joint L3, and there is heavy pack rust at the channel web and riveted plates. However, at the right truss, the pack rust is even more severe with an estimated 75 percent reduction at the channel web, and 50 percent reduction at the plates. See Photograph 55 and 56 at Joint R-L9, and Photograph 57 at Joint L-L9.

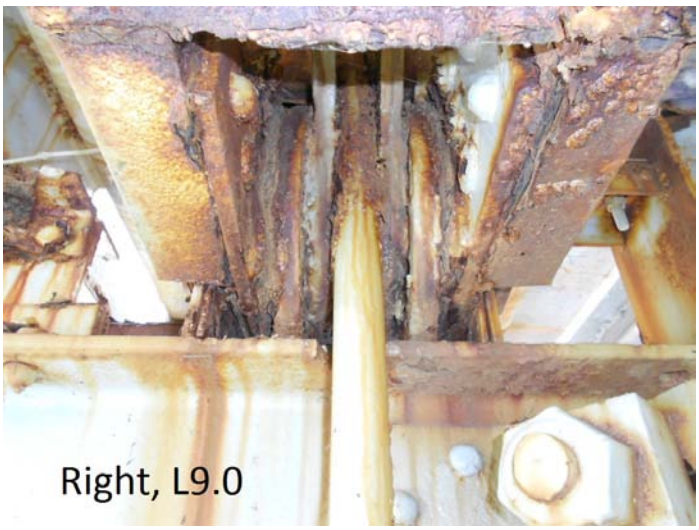


**Photograph 55**

**Photograph 56**

**Photograph 57**

3. Joint R-L1: At this location, the original double channel bottom chord is spliced using riveted web plates which are also used to reinforce the hole for the pin in the channel web. Steel reinforcing plates, 3/4-inch x 2 1/2 inches, were added and bolted to the channel flanges to reinforce this joint, most likely in 1980 or 1990. There is heavy pack rust at the riveted plates, and there is a web perforation at the outside channel near the bottom web as shown in Photographs 58 and 59. This perforation was the reason for a previous NYSDOT yellow flag notification. The bolted reinforcing plates are moderately rusted, and the inside channel is moderately rusted as shown in Photograph 60. For capacity calculations, the channel webs are considered 100 percent loss accounting for the perforation and pack rust, and the channel flanges are considered 25 loss of section.

**Photograph 58**

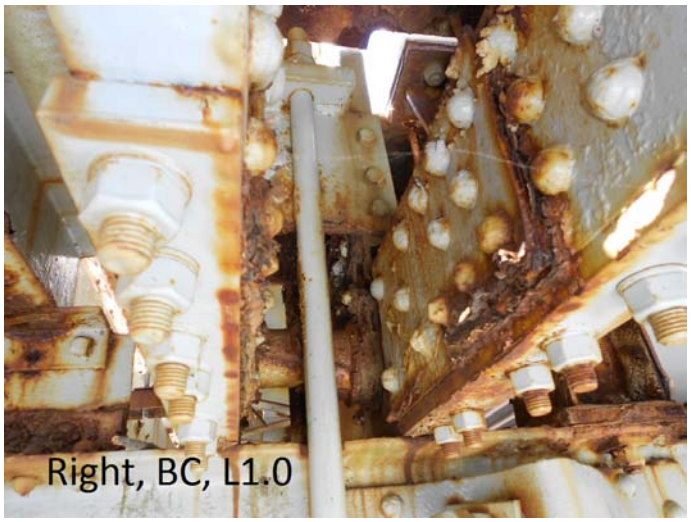


**Photograph 59**

**Photograph 60**

4. Joint R-L11: This joint configuration is similar to Joint R-L1, except in addition to the bolted plates at the channel flanges, 5-foot long pieces of steel channel were bolted to the outside of each of the original channels to further reinforce the section as shown in Photograph 61, most likely in 1980 or 1990. Access holes are cut in the web of these reinforcing channel as shown in Photograph 62 and debris and moisture is trapped between these channel and the original channels accelerating the corrosion. The web of the original channels are almost completely rusted out at the bolted connections as shown in Photograph 63. NYSDOT issued a yellow flag in November 2011 for this condition. For capacity calculations, the channel webs are considered 100 percent loss, and the channel flanges are considered 40 loss of section. (This joint governs the load rating of the bridge as described in the conclusions and load rating section of this report.)

**Photograph 61**

**Photograph 62**

**Photograph 63**

5. Joints L-L1, and L-L11: This joint configuration is similar to Joint R-L1; however, the rusting is less severe. There are areas of moderate to heavy pack rust at the riveted web plates, and the bolted flange plates are moderately rusted with about 10 percent section loss. See Photograph 64.

**Photograph 64**

6. Joints R-L2, L-L2, R-L10, L-L10: At these joints the double channel bottom chord is continuous and riveted plates are installed to reinforce the hole for the pin in the channel web. The channel webs are moderately rusted with rust pitting and there is moderate pack rust at the riveted plates. Section loss of about 20 percent is considered. See Photograph 65.

**Photograph 65**

7. Members R-L0-L0.5, L-L0-L0.5, R-L11.5-L12, L-L11.5-L12: At these locations, most likely in 1980 or 1990, the ends of the original bottom chord channels at the bearings were cut off and bolted steel plates in the shape of a long horseshoe were bolted to the channel webs and fitted around the pin at the bearings. At these

locations, there is moderate pack and surface rust and a section loss is about 10 percent is considered. See Photograph 66.

**Photograph 66**

8. Member R-L0-L3, L-L0-L3, R-L9-L12, L-L9-L12: At the double channel bottom chord, there are lacing bars riveted to the top and bottom flanges of the channels. At some locations, especially at the right truss, L10 to L12, the lacing bars are severely rusted and in some cases completely gone. See Photograph 67. Because these are tension members, the missing lacing bars have limited structural significance.

**Photograph 67**

9. Joints R-L5, L-L5, R-L7, L-L7: At these joints, the bottom chord eye bars are connected by pins. There is heavy pack rust at the connection of the vertical channel web members at the pins. Also, there is about a 1/4-inch deep rusted vertical groove in the head of the eye bar located along the edge of the vertical channels. See Photograph 68.

**Photograph 68**

10. Post-tension rods, R-L0-L12, L-L0-L12: There are post-tension rods located on each side of each bottom chord, and these rods tie together the bottom of the arch channels. The rods are covered with a plastic sheath. There is a gap in the sheath at the sheath splices at several locations along the bridge which can allow water to enter the sheath. No distress in the post tension rods was observed. See Photograph 69.

**Photograph 69**

**<u>Bridge Bearings</u> (Original 1899 / 1992 Rehabilitation)**

The bridge bearings for the trusses were replaced in 1992 and the arch bearings were also installed in 1992. At the trusses, the original pinned connection between the bottom chord and the end post of the trusses was retained. At the beginning bearing for the truss (Joint L0), an expansion bearing was installed using a PTFE (Teflon) slide bearing bonded to an elastomeric layer. At the end bearing for the truss (Joint L12), the lower portion of the original pinned fixed bearing was encased in concrete. At each end of the arch an expansion bearing was installed under each channel of the arch using the same type of slide bearings as was installed at the beginning truss bearing.

1. Joints R-L0 and L-L0: The paint system has failed and there is heavy surface rust on the bearing components but with little section loss. See Photograph 70. At the truss bearings, plates are riveted to the webs of the double channel end post to reinforce the channel webs at the pin holes. There is heavy pack rust between this riveted plate and the channel web, with a section loss of about 25 percent. See Photograph 71.

**Photograph 70**

**Photograph 71**

2. Joints R-L12 and L-L12: The paint system has completely failed and there is heavy rust on the bearing components with the right bearing more severely rusted than the left. At the arch channels at the right bearing, a section loss of about 20 percent is estimated, and the arch channels are slightly tilted or rotated inwards towards each other as shown in Photograph 72. The cause for this condition is unclear; however it may be due to the pack rust and rust jacking between the slide bearing components. There is no observed evidence of movement between the sliding components which are likely frozen due to the heavy rusting.

   At the truss bearings there is heavy pack rust between the riveted plates and the channel webs of the end post similar to the bearing at Joint L0. At the bearing at

the right truss (Joint R-L12), the vertical plate supporting the pin is also heavily rusted with heavy pack rust at the pin. The estimated section loss is 25 percent. Because the truss bearing components are confined in a small space between the arch channels and abutment walls, direct measurements of the rusted sections could not be made.

**Photograph 72**

**Photograph 73**

**<u>Floor Beams and Floor Beam Hangers</u> (Original 1899 / 1980 Repairs / 1992 Rehabilitation)**

The original floor beams are located at the truss panel points, and were reinforced in 1980. In 1992, new floor beams were installed midway between the panel points. The added floor beams allowed the existing stringers to be removed, and a new steel grating deck, half-filled with concrete was installed to span longitudinally between the floor beams. To maintain the same deck elevation without the stringers, sleeper beams were bolted to the top flange of the floor beams.

The ends of the floor beams are supported by hanger rods and a saddle plate is bolted to the bottom of the rods below the bottom flange. At the even numbered panel points, 4 hanger rods are used which extend and connect to the arch above. At the odd numbered panel points, 2 hanger rods are used which are bolted to the double channel truss vertical members just above the bottom chord. At the new floor beams at the half numbered panel points, 2 hanger rods are used which extend and connect to the arch above.

1. The floor beams are generally in good condition, except for moderate to heavy surface rusting at each end at both flanges and web. This rusting also occurs at the ends of the sleeper beams at the top flange where the bridge railing posts are attached. Section loss is minimal. See Photographs 75 and 76.

**Photograph 75**

**Photograph 76**

2. At many locations the 1 1/2-inch diameter hanger rods are severely rusted where they pass through the flanges and along the web of the floor beams. The diameter of the rods was measured, and the minimum diameter is 1.25 inches at the right truss at Joint L1.5.
See Photograph 77.

**Photograph 77**

3. The sidewalk along the right side of the bridge is supported by cantilevered brackets which are either bolted or riveted to the right end of the floor beams. The brackets at the original floor beams are built-up members with a top and bottom double angle and a tapered web plate as shown in Photograph 78. The brackets at the floor beams installed in 1992 are fabricated to be similar to the original brackets but with bolted connections.

The brackets are generally in good condition with light surface rust and localized pack rust. However, the top and bottom riveted connections are severely rusted at many locations. The most severe location is a R-L1 where the top and bottom riveted connections have up to 90 percent loss. See Photograph 79 which shows the bracket's top riveted angle connection.

**Photograph 78**

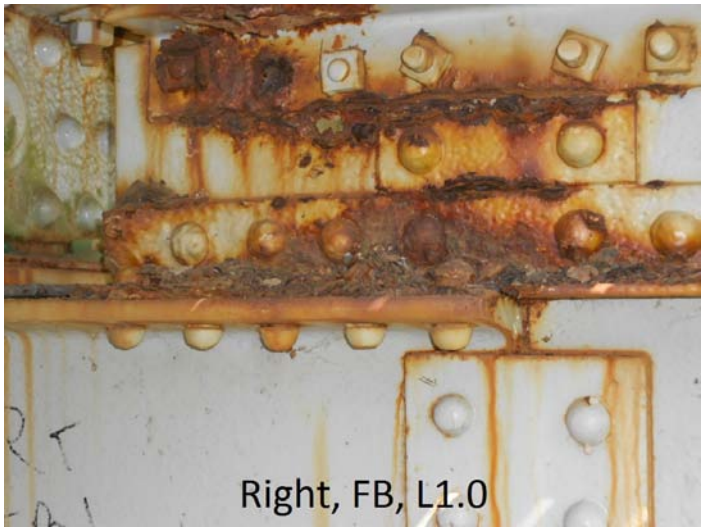


**Photograph 79**

**<u>Bridge Deck and Sidewalk Grating</u> (1992 Bridge Deck / 1939 Sidewalk Grating)**

The bridge deck was installed in 1992 and consists of galvanized steel grating half-filled with concrete with a 1 1/2-inch concrete overlay. The deck spans longitudinally between the floor beams. Granite curbs are provided along each edge of the deck with scuppers provided for drainage. Steel shield plates were installed in 1992 above the bottom chord of each truss at the elevation of the top of the curbs. These shield plates are continuous for the entire length of the bridge, except for gaps in the shield plate at every location where there is a truss vertical or diagonal web member or a floor beam hanger to the arch above.

1. The underside of the bridge deck is in very good condition, as shown in Photograph 80. There are transverse hairline cracks in the wearing surface over approximately every third floor beam, with the cracks at the north end of the bridge being somewhat more severe. See Photograph 81. There are no signs of water, rust, or salt stains at the underside of the deck, indicating that moisture is not currently penetrating through the deck. The granite curbs are also in very good condition.

**Photograph 80**

**Photograph 81**

2. At the beginning approach, there is an expansion joint with the deck consisting of an elastomeric compression seal installed between embedded steel angles. The elastomeric seal is depressed about 1 1/2 inches, and the seal is torn at the left side. This is likely allowing water and de-icing chemicals to seep down to the deck framing and substructure.

**Photograph 82**

3. The sidewalk grating and the sidewalk railing along the outside of the bridge was installed circa 1939. The grating is supported by channel stringers which span between cantilevered floor beam brackets. The railing is ornamental made from bars and angles riveted together. There is also a pipe hand railing installed in 1992 between the sidewalk and the shield plates above the truss bottom chord.

   There is light surface rust on the channel stringers, grating, and ornamental railing. At the pipe hand railing, there are localized areas of heavy rusting on the pipe posts. See Photograph 83.

**Photograph 83**

4. The bridge railing located between the bridge deck and the truss shield plates consists of galvanized double tube rails with galvanized W6 posts at each floor beam. Below the deck, the posts are bolted to the floor beams. The bridge railing

above the deck is in very good condition; however, below the deck, the paint system has failed and there is localized heavy rust and pack rust with up to 10 percent section loss at the railing posts. See Photograph 84.

**Photograph 84**

5. The steel shield plates which were added in 1992 above the right and left truss bottom chords are moderately to heavily rusted over most of their area. The paint system has failed and there are rust delaminations at localized areas. See Photographs 85 and 86. At some areas the support components below the shield plates are also heavily rusted as shown in Photograph 87.

   The shield plates were likely added to protect the bottom chord from moisture and deicing salts, and their section loss is not a structural issue. Gaps in the shield plates at the truss vertical members and hangers direct runoff onto the floor beams and bottom chord below, greatly reducing the effectiveness of the plates.

**Photograph 85**

**Photograph 86**

**Photograph 87**

# CONCLUSIONS, LOAD RATING AND LOAD POSTING

Portions of the bridge superstructure are in poor condition primarily due to corrosion, especially for those components at and below the deck level. Most of these components are of the original construction while there are a few members (around the bearings) installed 1980 and 1990 that are also experiencing corrosion. The NYSDOT 2011 Biennial Inspection Report listed an overall bridge condition rating of 4 out of 7 (mid-way between minor and major deterioration) which appears accurate as an overall rating. However, specific members of the superstructure are severely deteriorated, and would result in a Rating of 3 out of 7 (major deterioration) for the bridge's primary members.

The bridge abutments and wing walls are generally in good condition with only minor observed deterioration.

The bridge concrete deck and curbs are also in good condition, except for displacement of the deck elastomeric expansion joint seal at the beginning abutment. The floor beams are also in overall good condition, except for minor rusting at the ends of the floor beams.

The paint system is in poor condition, and in many areas has failed to protect the steel and iron components from rusting. Unless corrected, this failure of the paint system will result in the continued rusting and ultimately result in the loss of the capacity of the steel and iron components to support the bridge loads. Because the structural details of the trusses and arches have many crevices and inaccessible areas where individual or multiple layers of members are jointed together by either rivets or pins, the application of a paint system in these areas, many of which are critical connections, is very difficult and will likely never be completely successful.

See Appendix C for a summary of the member loads, inventory and operating ratings, and load posting values. The load ratings for the bridge are based upon our calculations of the capacity of the individual member or its connections. To account for the overall rusting of the members, a 10 percent reduction was applied to all members. An additional reduction in capacity was applied based upon our observations of the reduced sections at the specific members or connections.

The bridge Inventory Rating is HS6.33, and the Operating Rating is HS14.13. The Inventory Rating is based on a factor of safety used for repeated use over the design life of the bridge. The Operating rating is based on a reduced factor of safety that is suitable for rare overweight vehicles or limited, repeated loads over a duration of a few weeks or months. The deteriorated condition of several critical structural components limit the live load capacity of the bridge to a point where HS 20 (a standard truck with a design weight of 36 tons) cannot be safely supported, and the maximum vehicle weight that can be safely supported is 12 tons. This load rating is an Operating rating which can be safely supported for a limited duration but will deteriorate the bridge structure at an increased rate. An R-Permit Restriction prohibits overweight vehicles with a permit from using the bridge.

The following components have an Inventory Rating of less than HS 20 as a result of

deterioration:

- Rusted gusset plate and missing rivet at Joint U9, Left Truss. Inventory Rating HS 17.68.
- Bent Member A8 - M8, Right Truss. Inventory Rating HS17.89.
- Pack rust at Joint L3, Right Truss. Inventory Rating HS19.24
- Severe pack rust at Joint L9, Right Truss. Inventory Rating HS10.48
- Severe corrosion at bottom chord splice at Joint L11, Right Truss. Inventory Rating HS6.33. This governs the Inventory and Operating Ratings for the bridge.

In addition, the following items are of specific concern:

- At some locations, the welded connections at the lateral sway bracing between the trusses have cracked and broken welds. The trusses and arches depend upon this lateral bracing for their stability. At the time of our observations, there were enough remaining unbroken connections to provide stability. However, this assessment could change over time if there are any more locations with broken connections or deterioration, and this condition should be corrected.

- At each floor beam, there is a cantilevered bracket riveted or bolted to the right end of the floor beam with extends to support the sidewalk stringers. At many locations, the connections at the top and bottom of this bracket to the floor beam is severely rusted. There is also a riveted or bolted connection at the web of bracket to the web of the floor beam, and this web connection has only minor deterioration. At this time, our calculations show that sufficient capacity remains in this bracket's web connection to support the sidewalk design loads. However, this assessment could change over time if there is more deterioration, and this condition should be corrected.

- At the right truss, Joint R-L1, there is a web perforation in the truss bottom chord, outside channel as a result of severe rusting. This condition resulted in a Yellow Flag notification previously issued by NYSDOT. At this location, the inside bottom chord channel, and the reinforcing plates installed and bolted to the top and bottom flanges of the both the inside and outside channels are only moderately rusted. Our calculations result in an Inventory Rating of HS23.51 at this joint, accounting for the observed loss of the web and the remaining section. However, this condition should be corrected.

- At the right truss bearing at the end of the bridge, Joint R-L12, there is heavy rust and pack rust at the bearing and pin. Because of the inaccessibility at this location, the section loss can only be estimated. Any plans for bridge rehabilitation should include additional investigation and repair of this bearing and pin.

Because the bridge Inventory Rating is less than HS20, load posting calculations were made in accordance with NYSDOT, EI 05-034, "Load Rating / Load Posting Guidelines for State-Owned Highway Bridges."

Load Posting values recommended in EI 05-034 are based on the bridge's H Operating Rating. Our calculations result in a bridge Operating Rating of H14.13 governed by the

capacity of the bottom chord splice at Joint L11, Right Truss. Based upon the effective span length of the truss and the redundancy provided by the arch, this rating results in a maximum posting value of 12 tons. Furthermore, because of the low H Operating Rating, and because the bridge is a single lane, an R -Permit posting restriction is recommended. An R-Permit restriction prohibits vehicles with overweight permits from using the bridge.

Therefore, the bridge in its current condition should be posted for 12 tons, and should be posted for R-Permit restriction. As a gross over simplification, this means certain school buses, and most dump trucks and fire trucks should not be traversing the bridge.

# PROJECT OBJECTIVES

For purposes of this report, we have identified the following objectives to be considered when evaluating alternatives for the rehabilitation or replacement of the bridge:

1. Eliminate the structural deficiencies of the existing bridge and provide a structure capable of supporting unposted vehicular and pedestrian live loads with a minimum AASHTO Inventory Rating of HS-20.

2. Provide a durable structure with a long service life, while minimizing the need for future maintenance.

3. Provide a redundant type bridge structure.

4. Eliminate sub-standard features to meet the transportation needs of the public. This includes providing a two-lane bridge to eliminate the hazards of the current single lane bridge.

5. Minimize adverse environmental effects where possible, and provide mitigation for unavoidable impacts. This includes minimizing the environmental impact of work in the Kinderhook Creek.

6. Preserve the remaining historic nature of the bridge and the surrounding Historic District to the extent possible.

7. Compare probable construction costs of the alternatives.

# ALTERNATIVES

The following pages describe various bridge alternatives for both the substructures and superstructure. Each section lists the alternative, describes the features of the alternative, compares the alternative with the objectives of the project, and indicates our opinion of probable cost for that particular alternative. See the Opinion of Probable Cost section for a detailed total project cost analysis breakdown. The probable costs are based on the schematic designs described below and are therefore approximate only. As shown in the spreadsheets, the costs include the various items for a given concept, standard mobilization and field change order costs, as well as engineering and construction phase services.

Options for addressing the historic character of the Stuyvesant Falls Mill District include repairing the existing trusses (see options 2, 3A and 3B), strengthening the existing truss and using it in conjunction with new, clear span steel girders (see option 4), attaching the trusses to new, clear span steel girders (see option 6A), attaching truss-like elements that aesthetically mimic the existing trusses to new clear span steel girders (see option 6B), and modifying the bridge for pedestrian traffic (see option 7). Since not all of the options meet the objectives, a possible option is constructing a new bridge (see options 5 through 5D) and dismantling and storing all of the original existing bridge members, excluding the arches added in 1992. One possible option for the existing bridge would be to reassemble it nearby as the centerpiece of a park or museum.

## SUPERSTRUCTURE

### 1. Do nothing.

The existing bridge underwent major repairs in 1980 and 1991 and a complete structural renovation in 1992. It received two yellow flags during the 2013 biennial inspection and additional deteriorated connections were noted during the inspection by Ryan-Biggs in June 2013. Doing nothing does not meet the project objectives and is removed from further discussion.

### 2. Incidental Repairs with Painting

Perform repairs only to the connections and elements that received yellow flags and repaint the bridge. The bridge has significant deterioration to numerous structural elements and would be rated and posted for less than HS-20 vehicular traffic even after the items that received yellow flags are repaired. Performing only incidental repairs does not meet project objectives and is removed from further discussion. Specifically, the required load rating will restrict use of the bridge and incidental repairs will do nothing to reduce short-term maintenance costs due to continuing deterioration.

### 3A. Major Repairs

Perform repairs to the numerous connections and elements that received yellow flags, were noted as high priorities by Ryan-Biggs, and that are functional but deteriorated elements and connections such as the truss bottom chords, truss and arch bearings, and certain truss diagonals. The bridge would be rated to carry unposted, legal vehicular traffic. Performing only major repairs without painting does not meet the project objectives and is removed from further discussion. Specifically, a durable structure will not be achieved because the paint system has failed.

### 3B. Major Repairs with Painting

Perform repairs to the numerous connections and elements that received yellow flags, were noted as high priorities by Ryan-Biggs, and that are functional but deteriorated elements and connections such as the truss bottom chords, truss and arch bearings, and certain truss diagonals. The bridge would be rated to carry unposted, legal vehicular traffic. This option will marginally meet the project objectives by maintaining the current traffic capacity and should continue to perform adequately for a minimum of 20-25 years if properly maintained.

Our opinion of probable project cost to perform major repairs with painting is between $3,100,000 and $3,600,000. The projected 50-year costs are expected to be significantly higher since the eventual complete replacement of the bridge is anticipated based on the observed rate of deterioration and past repairs.

### 4. Reinforce Existing Trusses and Construct Steel, Single-Span Girders between the Trusses as Secondary Members

Remove the existing concrete-filled grating deck, and construct two, clear span steel girders between the trusses. Repair the existing trusses and reinforce the elements, if required, to carry unposted, legal vehicular traffic. Additional interior steel girders could be constructed and the existing trusses relocated to create a two-lane bridge. Install a new, reinforced concrete deck supported by the interior girders and the existing trusses. This option is considered to be technically infeasible due to the significant differences in stiffness between the trusses and the girders, and is removed from further discussion.

### 5. New Bridge with Reinforced Concrete Deck

Demolish existing bridge and construct new, one- or two-lane bridge with a reinforced concrete deck with asphalt wearing surface. The roadway would be at approximately the elevation and location as the existing to minimize modifications to the approaches. The new bridge would be designed for unposted, legal vehicular traffic, and would require minimal maintenance for the first 25-35 years. Constructing a one-lane bridge would

marginally meet the project objectives other than that for historic preservation. Constructing a two-lane bridge would meet all of the project objectives other than that for historic preservation, but would also create limited environmental effects by requiring additional abutment width to be constructed.

The primary options for constructing a completely new bridge at this site are outlined below. Refer to these options when reviewing the options for reinforcing the existing bridge with new, secondary framing members. The bridge deck for all framing options will be a 9.5-inch thick concrete deck reinforced with epoxy coated reinforcing steel.

**5A. Steel Truss with Steel Floor Beams**

Constructing a steel truss along the upstream and downstream sides of the bridge would allow the appearance of the new bridge to be similar to that of the existing bridge. Steel trusses are non-redundant (fracture critical) and require additional inspection during construction, resulting in a higher construction cost than other steel options. Steel truss bridges are also susceptible to deterioration from weather and deicing chemicals and are more difficult to access for maintenance than steel girder bridges. The trusses could be painted (resulting in significant future maintenance and life cycle costs), hot-dip galvanized (resulting in additional initial construction costs), or constructed of weathering steel (possibly resulting in an aesthetically objectionable appearance). For the purpose of this report, a painted steel truss bridge is assumed.

Our opinion of probable project cost to construct a two-lane, steel truss bridge is between $5,750,000 and $6,500,000. The estimate assumes a painted steel finish. Weathering or galvanized steel could be considered and would still have similar costs and slightly higher costs respectively.

**5B. Steel Arch Bridge with Steel Floor Beams**

Constructing a steel arch bridge is an option because the ends of the arches can be founded in the rock of the abutments. The appearance of the arch would resemble the reinforcing arch constructed during the 1992 rehabilitation within the original 1899 trusses, but the historic appearance of the trusses would be lost. There is typically a fair amount of maintenance associated with the steel arch and suspenders. In addition, it is not believed at this time that the County desires such a "signature" structure therefore this alternative is removed from further discussion.

**5C. Steel, Single-Span Steel Girder Bridge**

Constructing a modern, multi-girder bridge with steel girders that clear span between the abutments would create an efficient, cost-effective bridge that is the standard for new vehicular traffic bridges of this span length. Current practice for bridge construction is multi-span steel girder bridges with concrete decks because these types of bridges are structurally redundant, cost-effective to construct, and require relatively low maintenance.

Use of weathering steel would eliminate the need for future repainting. The historic nature of the existing bridge would be lost, although the sightlines to the Kinderhook Creek and the falls could be enhanced. See Option 6B for an aesthetic option that would be complementary to the historic district.

Our opinion of probable construction cost to construct a two-lane multi-girder steel bridge is between $4,500,000 and $5,000,000.

**5D. Precast Concrete Arch Bridge**

Constructing a precast concrete arch bridge is an option because the ends of the arches can be founded in the rock of the abutments. The appearance of the arch would resemble the reinforcing arch in the existing trusses, but the historic appearance of the trusses would be lost. It is not believed at this time that the County desires such a "signature" structure therefore this alternative is removed from further discussion.

**6A. Remove Existing Trusses and Re-Support from Steel, Single-Span Girder Bridge**

Dismantle, clean, and store the existing truss elements. Construct a new, multi-girder steel bridge (see option 5C). Reconstruct trusses and attach the existing truss elements to the new fascia girders. The existing trusses could span between the abutments or be partially supported from the existing trusses. The reinforcing arches installed in 1992 would be removed to make the trusses more historically accurate.

Although the truss top chords, hangers, and bottom chords would be preserved, the floor beams would be lost. Portions of the bottom chords that are significantly deteriorated would require replacement. Refer to the discussion of the current historical aspects of the existing bridge.

Painting of the existing trusses would be required after reconstruction and in the future, but the truss elements would be less exposed to deicing salts since they would be outside of the bridge deck so the deterioration would be less severe than in the current configuration.

Our opinion of probable project cost to construct a new bridge and attach the existing trusses to the new bridge is between $6,800,000 and $7,300,000.

**6B. Steel, Single-Span Girders with Simplified, Aesthetic Truss Configuration**

Constructing a modern, multi-girder bridge with steel girders that clear span between the abutments would create an efficient, cost-effective bridge that is the standard for new vehicular traffic bridges of this span length (see option 5C). Fabricate a simplified steel truss shape that matches the profile of the original 1899 trusses to aesthetically

complement the historic district. The truss profile would be entirely supported from the steel girder bridge.

Painting of the trusses could be done at the time of construction and in the future, but the truss elements would be less exposed to deicing salts since they would be outside of the bridge deck so the deterioration would be less severe than in the current configuration.

Our opinion of probable project cost to construct a new bridge and attach the existing trusses to the new bridge would be similar to 6A, but slightly less.

**7. Modify Bridge for Pedestrian Use Only**

Perform repairs only to the connections and elements that received yellow flags and were noted as high priorities by Ryan-Biggs. Close the bridge to vehicular traffic and install permanent barriers. Load rate the bridge using pedestrian loading and restrict pedestrian access to the full width to limit applied live loads. This option does not meet the project objectives and is removed from further discussion.

# OPINION OF PROBABLE PROJECT COST

Ryan-Biggs' opinion of probable project cost at this preliminary/concept level is made on the basis of Ryan-Biggs' experience and best judgment as an experienced bridge structural design professional. However, since Ryan-Biggs has no control over the cost of labor, materials, or equipment or over competitive bidding or market and economic conditions, Ryan-Biggs cannot guarantee that proposals, bids, or construction costs will not vary from its opinion of probable cost. If you wish greater assurance as to the project cost, an independent cost estimator should be employed by the County.

The cost ranges provided in the estimated Opinion of Probable Project Cost are in 2013 dollars. Depending on when the project is progressed, the cost ranges will increase due to normal, annual inflation factors. The project costs should be multiplied by an appropriate inflation factor to account for when the funds might realistically be obtained and the project undertaken.

The approximate opinion of probable costs for the four most feasible alternatives are provided on the subsequent pages. As a means to capture future maintenance between the alternatives an approximate life cycle cost breakdown over the next 50 years is shown below. Ultimately, a new steel multi-girder bridge (Option 5C) has the least cost over the next 50 years.

**Estimated 50-Year Capital Expenditures**

| Year | 3B: Major Repairs | | 5A: New Steel Truss (painted) | | 5C: Steel Girders | | 6A: Existing Truss on New Steel Girders | |
|---|---|---|---|---|---|---|---|---|
| 0 | Repair/paint | $3.6 | Replace bridge | $5.5 | Replace bridge | $5.0 | Replace bridge | $7.3 |
| 10 | | | | | | | | |
| 20 | Repair/paint | $3.6 | Paint | $1.0 | | | Repaint 1899 truss | $1.5 |
| 30 | Replace bridge | $5.5 | Deck & minor repairs | $1.0 | Deck repairs | $0.5 | Deck repairs | $0.5 |
| 40 | | | Paint | $1.0 | | | Repaint 1899 truss | $1.5 |
| 50 | | | Deck repairs | $0.5 | Deck & minor repairs | $1.0 | Deck & minor repairs | $1.0 |
| | Total | $12.7 | Total | $9.0 | Total | $6.5 | Total | $11.8 |

Costs for necessary cyclical and preventative maintenance activities (i.e. bridge washing, deck sealing, spot/zone painting, bearing maintenance, etc.) are not included in the above table. It is known that truss-type bridges built in the northern and northeastern United States are more maintenance-intensive than multi-girder, non-truss bridges. Truss-type bridges require cyclical and preventative maintenance more frequently, and it is more difficult to perform and correspondingly more expensive, than non-truss-type bridges. Therefore, life cycle maintenance costs will vary, from highest to lowest, for Options 3B, 5A, 6A, and 6B.

BIN 3342250 - County Route 25A (Stuyvesant Falls Bridge) over Kinderhook Creek
Town of Stuyvesant Falls, New York, Columbia County

Alternative 3B; Major Repairs with Painting

| | Item No. | Description | Unit | Quant | 4487-1 RBA Unit Price | 4487-1 RBA Extended |
|---|---|---|---|---|---|---|
| | 201.06 | Clearing and Grubbing | LS | 1 | $15,000.00 | $15,000 |
| | | | | | | $0 |
| | 202.12 | Removing existing shield plates | LB | 16000 | $1.00 | $16,000 |
| | | | | | | $0 |
| | 209.13 | Silt Fence - Temporary | FT | 200 | $5.00 | $1,000 |
| | 209.1501 | Turbidity Curtain - Temporary | FT | 200 | $10.00 | $2,000 |
| | 553.020001 | Cofferdams (Type 2) | EA | 2 | $10,000.00 | $20,000 |
| | | Substructure repairs | LS | 1 | $50,000.00 | $50,000 |
| | | Install new shield plates | LB | 16000 | $3.00 | $48,000 |
| | | Temp shoring and BC tension bypass, per joint | EA | 14 | $15,000.00 | $210,000 |
| | | Remove channel bottom chords (3 bays each end, each truss) | LB | 8000 | $1.00 | $8,000 |
| | | New Bar bottom chords (3 bays each end, each truss) | LB | 6000 | $4.00 | $24,000 |
| | | Rework pin connections at new bottom chords | EA | 12 | $15,000.00 | $180,000 |
| | | Rework 10 percent of U, A, and M joints | EA | 8 | $15,000.00 | $120,000 |
| | | Rework 50 percent of L joints not replaced | EA | 6 | $10,000.00 | $60,000 |
| | | Rework bearings at truss and arch | EA | 4 | $50,000.00 | $200,000 |
| | | Deck repairs | LS | 1 | $30,000.00 | $30,000 |
| | | | | | | $0 |
| | | Painting | LS | 1 | $1,500,000.00 | $1,500,000 |
| | | Contractor estimates range from $700K to $2,500K | | | | |
| | 619.01 | Basic Workzone Traffic Control | LS | 1 | $20,000.00 | $20,000 |
| | 625.01 | Survey Operations | LS | 1 | $25,000.00 | $25,000 |
| | | | | | | $0 |
| | | | | **Subtotal** | | **$2,529,000** |
| | 699.040001 | Mobilization (4 percent) | LS | 1 | $101,160 | $101,160 |
| | 697.03 | Field Change Order (FCO, 6 percent) | LS | 1 | $151,740 | $151,740 |
| | | Contingency (10 percent) | LS | 1 | $252,900 | $252,900 |
| | | | | | | $0 |
| | | | | | | $0 |
| | | | | **TOTAL** | | **$3,034,800** |
| | | ***Engineering and Design*** | LS | 1 | $400,000 | $400,000 |
| | | ***Construction Phase (Administration and Inspection)*** | LS | 1 | $200,000 | $200,000 |
| | | | | **TOTAL** | | **$3,634,800** |

BIN 3342250 - County Route 25A (Stuyvesant Falls Bridge) over Kinderhook Creek
Town of Stuyvesant Falls, New York, Columbia County

Alternative 5A; New steel truss bridge (Two-Lane Bridge)

| | Item No. | Description | Unit | Quant | 4487-1 RBA Unit Price | 4487-1 RBA Extended |
|---|---|---|---|---|---|---|
| | 201.06 | Clearing and Grubbing | LS | 1 | $15,000.00 | $15,000 |
| | | | | | | $0 |
| | 202.12 | Removing existing superstructures (2 trusses with arches) | LB | 186000 | $1.50 | $279,000 |
| | 202.12 | Removing existing floor beams (24 beams x 26 ft) | LB | 25000 | $0.75 | $18,750 |
| | 202.12 | Removing existing shield plates | LB | 16000 | $0.75 | $12,000 |
| | 202.12 | Removing existing sidewalk grating | SF | 1000 | $0.75 | $750 |
| | | | | | | $0 |
| | 202.12 | Removing existing concrete-filled grating deck (70 psf with conc, 6.5 in t | SF | 3200 | $3.00 | $9,600 |
| | | | | | | $0 |
| | 202.19 | Remove Existing Substructure | CY | 667 | $75.00 | $50,025 |
| | | | | | | $0 |
| | 203.02 | Unclassified Excavation and Disposal | CY | 1000 | $20.00 | $20,000 |
| | 203.03 | Embankment In Place | CY | 1800 | $40.00 | $72,000 |
| | 203.21 | Select Structure Fill | CY | 1800 | $60.00 | $108,000 |
| | 206.01 | Structure Excavation | CY | 3600 | $30.00 | $108,000 |
| | | | | | | $0 |
| | 207.26 | Prefabricated Composite Structural Drain | SY | 75 | $20.00 | $1,500 |
| | 209.13 | Silt Fence - Temporary | FT | 800 | $5.00 | $4,000 |
| | 209.1501 | Turbidity Curtain - Temporary | FT | 400 | $10.00 | $4,000 |
| | 304.12 | Subbase Course, Type 2 | CY | 200 | $50.00 | $10,000 |
| | 402.128202 | 12.5 F2 Top Course HMA, 80 Series Compaction | T | 21 | $150.00 | $3,150 |
| | 402.198902 | 19 F9 Binder Course HMA, 80 Series Compaction | T | 32 | $150.00 | $4,725 |
| | 402.378902 | 37.5 F9 Base Course HMA, 80 Series Compaction | T | 53 | $150.00 | $7,875 |
| | 407.0102 | Diluted Tack coat | G | 100 | $10.00 | $1,000 |
| | 553.020001 | Cofferdams (Type 2) | EA | 2 | $10,000.00 | $20,000 |
| | 555.08 | Footing Concrete , Class HP | CY | 267 | $500.00 | $133,500 |
| | 555.09 | Concrete for Structures, Class HP | CY | 445 | $1,000.00 | $445,000 |
| | 556.0202 | Epoxy-Coated Bar Reinforcement for Structures | LB | 70000 | $2.00 | $140,000 |
| | 556.03 | Stud Shear Connectors | EA | 4372 | $3.50 | $15,302 |
| | 557.0503 | Superstructure Slab w/Integral Wearing Surface, Bottom Formwork Req | SF | 7760 | $40.00 | $310,400 |
| | 557.2003 | Structural Approach Slab w/ Integral Wearing Surface Type 3 friction | SF | 2400 | $40.00 | $96,000 |
| | 557.3 | Sidewalk on Bridge | SF | 1430 | $20.00 | $28,600 |
| | 558.02 | Longitudinal Sawcut Grooving of Structural Slab Surface | SY | 1100 | $25.00 | $27,500 |
| | 559.1896--18 | Protective Sealing of Structural Concrete | SF | 10000 | $2.00 | $20,000 |
| | | Truss Connections | LS | 1 | $600,000.00 | $600,000 |
| | 564 | Structural steel truss and Floor beeams | LB | 320000 | $3.00 | $960,000 |
| | 565.1922 | Bearings | EA | 4 | $8,000.00 | $32,000 |
| | 568.54 | Steel Bridge Railing (Three-Rail) | FT | 410 | $180.00 | $73,800 |
| | 568.70 | Transition Bridge Railing | FT | 128 | $150.00 | $19,200 |
| | 572.01 | Shop-Applied Paint | SF | 14000 | $15.00 | $210,000 |
| | 606.100002 | Box Beam Guide Railing (shop bent or shop mitered) | FT | 400 | $40.00 | $16,000 |
| | 606.120101 | Box Beam Guide End Piece | EA | 4 | $500.00 | $2,000 |
| | | | | | | $0 |
| | 609.0304 | Granite Curb | LF | 568 | $70.00 | $39,760 |
| | 610.1402 | Top soil - Roadside | CY | 200 | $100.00 | $20,000 |
| | 610.1601 | Turf Establishment - Roadside | SY | 2400 | $20.00 | $48,000 |
| | 619.01 | Basic Workzone Traffic Control | LS | 1 | $20,000.00 | $20,000 |
| | 620.04 | Stone Filling (Medium) | CY | 200 | $100.00 | $20,000 |
| | 620.05 | Stone Filling (Heavy) | CY | | | $0 |
| | 625.01 | Survey Operations | LS | 1 | $25,000.00 | $25,000 |
| | | | | | | $0 |

| | | | | | |
|---|---|---|---|---|---|
| | | | **Subtotal** | | **$4,051,437** |
| 699.040001 | Mobilization (4 percent) | LS | 1 | $162,057 | $162,057 |
| 697.03 | Field Change Order (FCO, 6 percent) | LS | 1 | $243,086 | $243,086 |
| | Contingency (10 percent) | LS | 1 | $405,144 | $405,144 |
| | | | | | $0 |
| | | | | | $0 |
| | | | **TOTAL** | | **$4,861,724** |

| | | | | | |
|---|---|---|---|---|---|
| | ***Engineering and Design*** | LS | 1 | $600,000 | $600,000 |
| | ***Construction Phase (Administration and Inspection)*** | LS | 1 | $300,000 | $300,000 |
| | | | **TOTAL** | | **$5,761,724** |

BIN 3342250 - County Route 25A (Stuyvesant Falls Bridge) over Kinderhook Creek
Town of Stuyvesant Falls, New York, Columbia County

Alternative 5C; New steel multi-girder bridge

| | Item No. | Description | Unit | Quant | 4487-1 RBA Unit Price | 4487-1 RBA Extended |
|---|---|---|---|---|---|---|
| | 201.06 | Clearing and Grubbing | LS | 1 | $15,000.00 | $15,000 |
| | | | | | | $0 |
| | 202.12 | Removing existing superstructures (2 trusses with arches) | LB | 186000 | $1.50 | $279,000 |
| | 202.12 | Removing existing floor beams (24 beams x 26 ft) | LB | 25000 | $0.75 | $18,750 |
| | 202.12 | Removing existing shield plates | LB | 16000 | $0.75 | $12,000 |
| | 202.12 | Removing existing sidewalk grating | SF | 1000 | $0.75 | $750 |
| | | | | | | $0 |
| | 202.12 | Removing existing concrete-filled grating deck (70 psf with conc, 6.5 in to | SF | 3200 | $3.00 | $9,600 |
| | | | | | | $0 |
| | 202.19 | Remove Existing Substructure | CY | 667 | $75.00 | $50,025 |
| | | | | | | $0 |
| | 203.02 | Unclassified Excavation and Disposal | CY | 1000 | $20.00 | $20,000 |
| | 203.03 | Embankment In Place | CY | 1800 | $40.00 | $72,000 |
| | 203.21 | Select Structure Fill | CY | 1800 | $60.00 | $108,000 |
| | 206.01 | Structure Excavation | CY | 3600 | $30.00 | $108,000 |
| | | | | | | $0 |
| | 207.26 | Prefabricated Composite Structural Drain | SY | 75 | $20.00 | $1,500 |
| | 209.13 | Silt Fence - Temporary | FT | 800 | $5.00 | $4,000 |
| | 209.1501 | Turbidity Curtain - Temporary | FT | 400 | $10.00 | $4,000 |
| | 304.12 | Subbase Course, Type 2 | CY | 200 | $50.00 | $10,000 |
| | 402.128202 | 12.5 F2 Top Course HMA, 80 Series Compaction | T | 21 | $150.00 | $3,150 |
| | 402.198902 | 19 F9 Binder Course HMA, 80 Series Compaction | T | 32 | $150.00 | $4,725 |
| | 402.378902 | 37.5 F9 Base Course HMA, 80 Series Compaction | T | 53 | $150.00 | $7,875 |
| | 407.0102 | Diluted Tack coat | G | 100 | $10.00 | $1,000 |
| | 553.020001 | Cofferdams (Type 2) | EA | 3 | $10,000.00 | $30,000 |
| | 555.08 | Footing Concrete , Class HP | CY | 267 | $500.00 | $133,500 |
| | 555.09 | Concrete for Structures, Class HP | CY | 445 | $1,000.00 | $445,000 |
| | 556.0202 | Epoxy-Coated Bar Reinforcement for Structures | LB | 70000 | $2.00 | $140,000 |
| | 556.03 | Stud Shear Connectors | EA | 4372 | $3.50 | $15,302 |
| | 557.0503 | Superstructure Slab w/Integral Wearing Surface, Bottom Formwork Req | SF | 7760 | $40.00 | $310,400 |
| | 557.2003 | Structural Approach Slab w/ Integral Wearing Surface Type 3 friction | SF | 2400 | $40.00 | $96,000 |
| | 557.3 | Sidewalk on Bridge | SF | 1430 | $20.00 | $28,600 |
| | 558.02 | Longitudinal Sawcut Grooving of Structural Slab Surface | SY | 1100 | $25.00 | $27,500 |
| | 559.1896--18 | Protective Sealing of Structural Concrete | SF | 10000 | $2.00 | $20,000 |
| | | | | | | $0 |
| | 564 | Structural steel girders | LB | 611000 | $2.25 | $1,374,750 |
| | 565.1922 | Bearings | EA | 12 | $3,000.00 | $36,000 |
| | 568.54 | Steel Bridge Railing (Three-Rail) | FT | 410 | $180.00 | $73,800 |
| | 568.70 | Transition Bridge Railing | FT | 128 | $150.00 | $19,200 |
| | 606.100002 | Box Beam Guide Railing (shop bent or shop mitered) | FT | 400 | $40.00 | $16,000 |
| | 606.120101 | Box Beam Guide End Piece | EA | 4 | $500.00 | $2,000 |
| | | | FT | | | $0 |
| | 609.0304 | Granite Curb | LF | 568 | $70.00 | $39,760 |
| | 610.1402 | Top soil - Roadside | CY | 200 | $100.00 | $20,000 |
| | 610.1601 | Turf Establishment - Roadside | SY | 2400 | $20.00 | $48,000 |
| | 619.01 | Basic Workzone Traffic Control | LS | 1 | $20,000.00 | $20,000 |
| | 620.04 | Stone Filling (Medium) | CY | 200 | $100.00 | $20,000 |
| | 620.05 | Stone Filling (Heavy) | CY | | | $0 |
| | 625.01 | Survey Operations | LS | 1 | $25,000.00 | $25,000 |
| | | | | | | $0 |

| | | | | | |
|---|---|---|---|---|---|
| | | | **Subtotal** | | **$3,670,187** |
| 699.040001 | Mobilization (4 percent) | LS | 1 | $146,807 | $146,807 |
| 697.03 | Field Change Order (FCO, 6 percent) | LS | 1 | $220,211 | $220,211 |
| | Contingency (10 percent) | LS | 1 | $367,019 | $367,019 |
| | | | | | $0 |
| | | | | | $0 |
| | | | **TOTAL** | | **$4,404,224** |

| | | | | | |
|---|---|---|---|---|---|
| | ***Engineering and Design*** | LS | 1 | $400,000 | $400,000 |
| | ***Construction Phase (Administration and Inspection)*** | LS | 1 | $250,000 | $250,000 |
| | | | **TOTAL** | | **$5,054,224** |

BIN 3342250 - County Route 25A (Stuyvesant Falls Bridge) over Kinderhook Creek
Town of Stuyvesant Falls, New York, Columbia County

Alternative 6; New bridge with existing trusses attached

| | Item No. | Description | Unit | Quant | 4487-1 RBA Unit Price | 4487-1 RBA Extended |
|---|---|---|---|---|---|---|
| | 201.06 | Clearing and Grubbing | LS | 1 | $15,000.00 | $15,000 |
| | | | | | | $0 |
| | 202.11 | Removing existing superstructures (2 trusses with arches) | LB | 186000 | $1.75 | $325,500 |
| | 564 | Rehabilitate existing trusses (remove arches and BC) | LB | 87000 | $1.25 | $108,750 |
| | | New sway bracing | LB | 12000 | $2.00 | $24,000 |
| | | Erect rehabilitated trusses | LB | 87000 | $1.25 | $108,750 |
| | | Paint rehabilitated trusses | LS | 1 | $1,500,000.00 | $1,500,000 |
| | 202.12 | Removing existing floor beams (24 beams x 26 ft) | LB | 25000 | $0.75 | $18,750 |
| | 202.12 | Removing existing shield plates | LB | 16000 | $0.75 | $12,000 |
| | 202.12 | Removing existing sidewalk grating | SF | 1000 | $0.75 | $750 |
| | | | | | | $0 |
| | 202.12 | Removing existing concrete-filled grating deck (70 psf with conc, 6.5 in to | SF | 3200 | $10.00 | $32,000 |
| | | | | | | $0 |
| | 202.19 | Remove Existing Substructure | CY | 667 | $75.00 | $50,025 |
| | | | | | | $0 |
| | 203.02 | Unclassified Excavation and Disposal | CY | 1000 | $20.00 | $20,000 |
| | 203.03 | Embankment In Place | CY | 1800 | $40.00 | $72,000 |
| | 203.21 | Select Structure Fill | CY | 1800 | $60.00 | $108,000 |
| | 206.01 | Structure Excavation | CY | 3600 | $30.00 | $108,000 |
| | | | | | | $0 |
| | 207.26 | Prefabricated Composite Structural Drain | SY | 75 | $20.00 | $1,500 |
| | 209.13 | Silt Fence - Temporary | FT | 800 | $5.00 | $4,000 |
| | 209.1501 | Turbidity Curtain - Temporary | FT | 400 | $10.00 | $4,000 |
| | 304.12 | Subbase Course, Type 2 | CY | 200 | $50.00 | $10,000 |
| | 402.128202 | 12.5 F2 Top Course HMA, 80 Series Compaction | T | 21 | $150.00 | $3,150 |
| | 402.198902 | 19 F9 Binder Course HMA, 80 Series Compaction | T | 32 | $150.00 | $4,725 |
| | 402.378902 | 37.5 F9 Base Course HMA, 80 Series Compaction | T | 53 | $150.00 | $7,875 |
| | 407.0102 | Diluted Tack coat | G | 100 | $10.00 | $1,000 |
| | 553.020001 | Cofferdams (Type 2) | EA | 2 | $10,000.00 | $20,000 |
| | 555.08 | Footing Concrete , Class HP | CY | 267 | $500.00 | $133,500 |
| | 555.09 | Concrete for Structures, Class HP | CY | 445 | $1,000.00 | $445,000 |
| | 556.0202 | Epoxy-Coated Bar Reinforcement for Structures | LB | 70000 | $2.00 | $140,000 |
| | 556.03 | Stud Shear Connectors | EA | 4372 | $3.50 | $15,302 |
| | 557.0503 | Superstructure Slab w/Integral Wearing Surface, Bottom Formwork Req | SF | 7760 | $40.00 | $310,400 |
| | 557.2003 | Structural Approach Slab w/ Integral Wearing Surface Type 3 friction | SF | 2400 | $40.00 | $96,000 |
| | 557.3 | Sidewalk on Bridge | SF | 1430 | $20.00 | $28,600 |
| | 558.02 | Longitudinal Sawcut Grooving of Structural Slab Surface | SY | 1100 | $25.00 | $27,500 |
| | 559.1896--18 | Protective Sealing of Structural Concrete | SF | 10000 | $2.00 | $20,000 |
| | | | | | | $0 |
| | 564 | Structural steel girders | LB | 631000 | $2.25 | $1,419,750 |
| | 565.1922 | Bearings | EA | 12 | $3,000.00 | $36,000 |
| | 568.54 | Steel Bridge Railing (Three-Rail) | FT | 410 | $180.00 | $73,800 |
| | 568.70 | Transition Bridge Railing | FT | 128 | $150.00 | $19,200 |
| | 606.100002 | Box Beam Guide Railing (shop bent or shop mitered) | FT | 400 | $40.00 | $16,000 |
| | 606.120101 | Box Beam Guide End Piece | EA | 4 | $500.00 | $2,000 |
| | | | FT | | | $0 |
| | 609.0304 | Granite Curb | LF | 568 | $70.00 | $39,760 |
| | 610.1402 | Top soil - Roadside | CY | 200 | $100.00 | $20,000 |
| | 610.1601 | Turf Establishment - Roadside | SY | 2400 | $20.00 | $48,000 |
| | 619.01 | Basic Workzone Traffic Control | LS | 1 | $20,000.00 | $20,000 |
| | 620.04 | Stone Filling (Medium) | CY | 200 | $100.00 | $20,000 |
| | 620.05 | Stone Filling (Heavy) | CY | | | $0 |
| | 625.01 | Survey Operations | LS | 1 | $25,000.00 | $25,000 |
| | | | | | | $0 |

| | | | | | |
|---|---|---|---|---|---|
| | | | **Subtotal** | | **$5,515,587** |
| 699.040001 | Mobilization (4 percent) | LS | 1 | $220,623 | $220,623 |
| 697.03 | Field Change Order (FCO, 6 percent) | LS | 1 | $330,935 | $330,935 |
| | Contingency (10 percent) | LS | 1 | $551,559 | $551,559 |
| | | | | | $0 |
| | | | | | $0 |
| | | | **TOTAL** | | **$6,618,704** |

| | | | | | |
|---|---|---|---|---|---|
| | ***Engineering and Design*** | LS | 1 | $500,000 | $500,000 |
| | ***Construction Phase (Administration and Inspection)*** | LS | 1 | $250,000 | $250,000 |
| | | | **TOTAL** | | **$7,368,704** |

# RECOMMENDATIONS

Based on our findings, the existing steel truss superstructure is in need of corrective action. We recommend the bridge be posted for 12 tons. This load rating assumes that no repairs are performed and is the maximum live load permissible on the bridge. A 12 ton rating is less than the weight of a typical school bus and most emergency vehicles such as fire trucks. The actual vehicles should be investigated and those exceeding 12 tons would should not be permitted to use the bridge. It is possible to repair or reinforce certain elements of the superstructure to improve the rating. The rating would technically be somewhat temporary since if no other repairs or painting is provided other elements would continue to deteriorate and would eventually control the rating.

While it is possible to repair the existing steel truss superstructure, future repainting and major repairs to these components will be inevitable. These significant future costs are not included in the initial Opinion of Probable Project Costs but have been included in the life cycle costs. The complete bridge replacement alternative using composite steel multi-girders (Option 5C) have slightly higher initial costs but significantly lower 50-year life cycle costs, given proper detailing and material selection. Initial alternative costs with estimated life cycle costs show that the bridge replacement options are significantly less costly.

If the County does select a complete bridge replacement alternative, many choices regarding the aesthetics and desired traffic capacity of the bridge must be made by the County. Once these choices are made, the Opinion of Probable Project Cost range can be refined. Inflation factors should be applied to the cost range to account for when the funds might realistically be obtained.

Several steps must be undertaken for either the major repair with painting project or complete replacement project to proceed into construction. Most importantly, a funding source must be obtained. There are items that can be completed without having the funding completely secured, and therefore we recommend the following:

1. Meet with Ryan-Biggs to review the report and discuss future steps.

2. Columbia County to select a preferred alternative for the bridge.

3. Begin dialogue on the preferred alternative with the existing utility owners, environmental agencies, SHPO, the Town of Stuyvesant, emergency services providers, and other stakeholders.

4. Retain the services of an Engineering team to perform final surveying and geotechnical, environmental, traffic and structural designs.

5. Perform topographic and property line mapping. With the mapping complete, the need for permanent or temporary easements could be determined.

6. Coordinate project funding streams, environmental permits, utility agreements, flow needs, etc.

7. Prepare Contract Documents for project letting.

# Appendix A

## LOCATION MAP

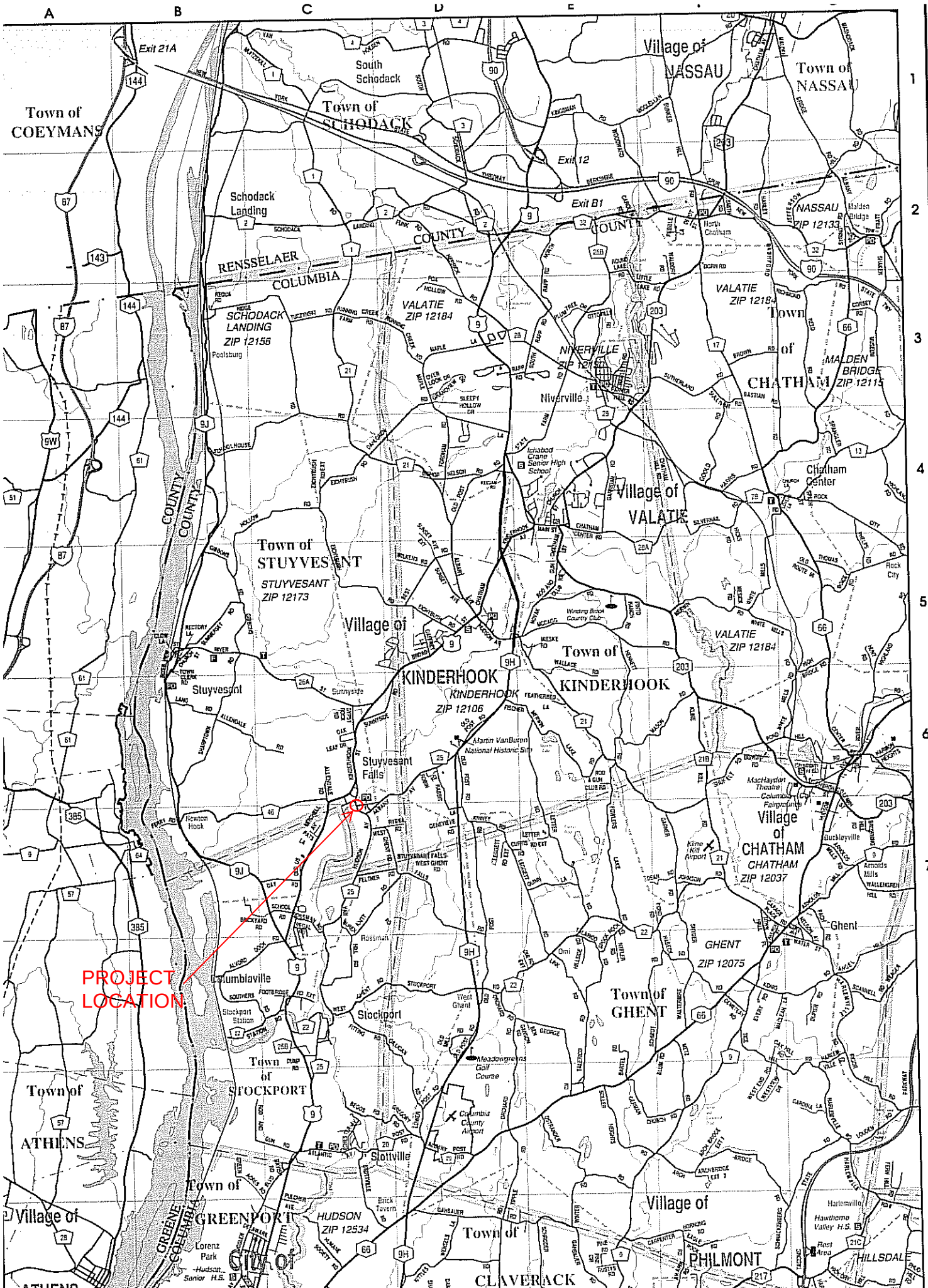
PROJECT LOCATION
Town of COEYMANS
Town of SCHODACK
Village of NASSAU
Town of NASSAU
South Schodack
Schodack Landing
Exit 21A
Exit 12
Exit 8I
RENSSELAER COUNTY
COLUMBIA COUNTY
SCHODACK LANDING ZIP 12156
VALATIE ZIP 12184
NIVERVILLE ZIP 12135
Niverville
NASSAU ZIP 12133
Town of CHATHAM
MALDEN BRIDGE ZIP 12115
Chatham Center
Village of VALATIE
Town of STUYVESANT
STUYVESANT ZIP 12173
Stuyvesant
Village of KINDERHOOK
KINDERHOOK ZIP 12106
Town of KINDERHOOK
Stuyvesant Falls
Village of CHATHAM
CHATHAM ZIP 12037
GHENT ZIP 12075
Ghent
Town of GHENT
Columbiaville
Stockport
Town of STOCKPORT
Town of ATHENS
Village of GREENPORT
HUDSON ZIP 12534
CITY OF HUDSON
Town of CLAVERACK
Village of PHILMONT
HILLSDALE
FOR ADJOINING AREA SEE MAP 14

# Appendix B

## RECORD DRAWINGS, DATED JULY 1992

**Drawing No. 4, General Plan and Elevation**
**Drawing No. 12, Deck Plans**
**Drawing No. 13, Typical Bridge Sections**
**Drawing No. 15, Truss Elevation**

| FED. ROAD REG. NO. | STATE | FEDERAL AID PROJECT NO. | SHEET NO. | TOTAL SHEETS |
|---|---|---|---|---|
| 1 | N.Y. | | 4 | 30 |

COUNTY ROUTE 25A OVER KINDERHOOK CREEK

TOWN OF STUYVESANT, COLUMBIA COUNTY

P.I.N. 8754.55 B.I.N. 3342250

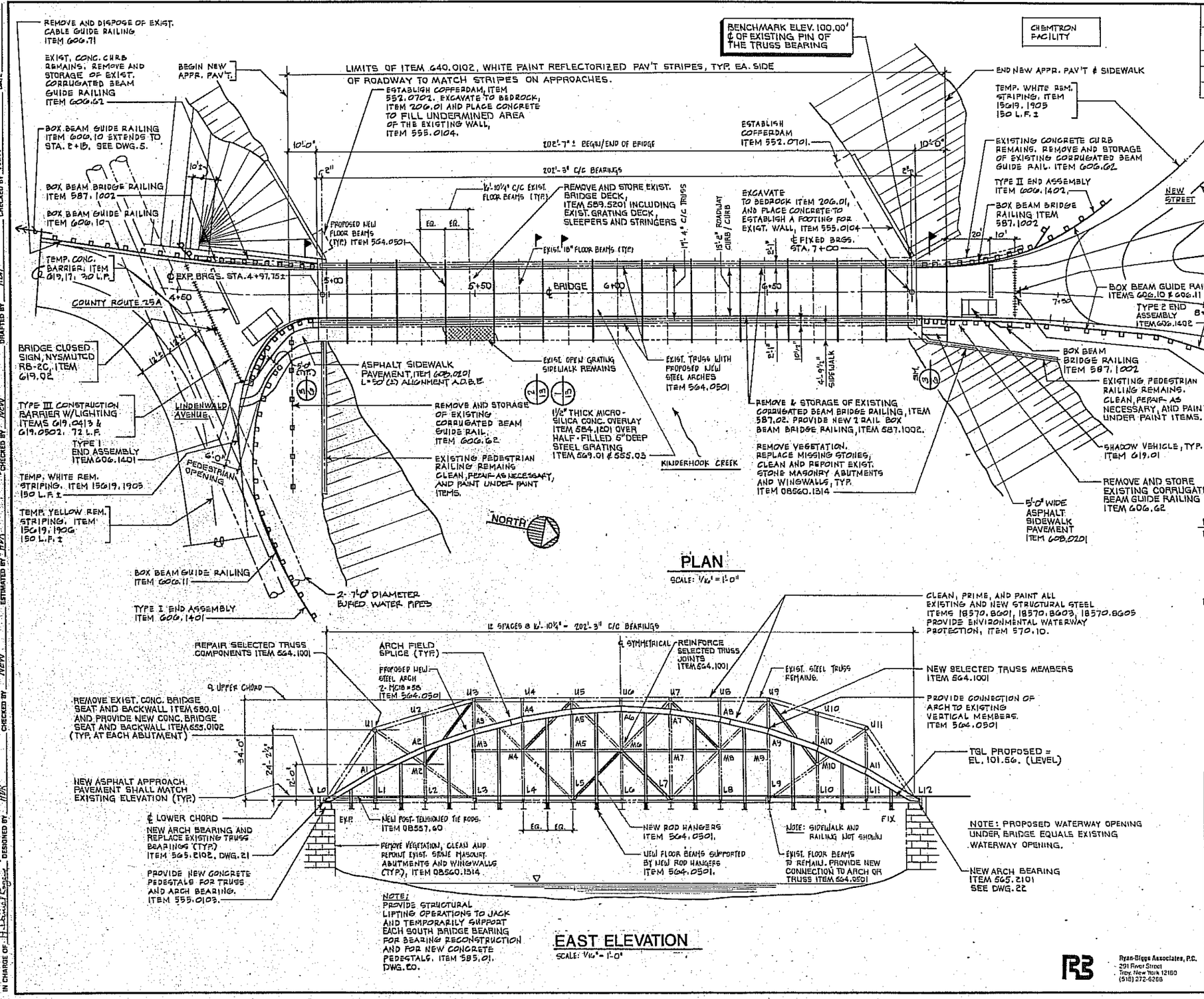


## PLAN

SCALE: 1/16" = 1'-0"




## EAST ELEVATION

SCALE: 1/16" = 1'-0"

NOTE:

1. STA. 7+00 IS DEFINED AS THE CENTERLINE OF THE NORTH BEARING PIN. CENTERLINE OF REHABILITATED BRIDGE SHALL MATCH CENTERLINE OF THE EXISTING BRIDGE. CONTRACTOR SHALL ESTABLISH A PROJECT BASELINE USING THE CENTERLINE OF THE EXISTING BRIDGE FOR HIS WORK UNDER ITEM 634.01
2. ASSUMED PROJECT BENCHMARK ELEVATION 100.00' AT THE CENTERLINE OF THE PIN AT THE NORTH-WEST BEARING OF THE TRUSS. CONTRACTOR SHALL ESTABLISH A BENCHMARK AT THE SOUTH APPROACH FOR HIS WORK UNDER ITEM 634.01. NOTE THAT CENTERLINE OF THE PIN AT THE SOUTH BEARINGS SHALL MATCH THE EXISTING AFTER THE WORK IS COMPLETE. CONTRACTOR SHALL VERIFY THAT THE CENTERLINE OF PIN ELEVATION OF THE SOUTH BEARING IS ALSO EL. 100.00' (ITEM 634.01). IF IT IS NOT, ALL ELEVATIONS AT THE SOUTH ABUTMENT SHALL BE ADJUSTED ACCORDINGLY.

AS – BUILT REVISIONS

SIGNATURE DATE

# GENERAL PLAN AND ELEVATION

STATE OF NEW YORK
DEPARTMENT OF TRANSPORTATION

| DRAWING NO. | SCALE | DATE | REGION |
|---|---|---|---|
| 4 | 1/16" = 1'-0" | 7-23-92 | 8 |

Ryan-Biggs Associates, P.C.
291 River Street
Troy, New York 12180
(518) 272-6266

DATE | DRAFTED BY HBR | CHECKED BY NEW | DESIGNED BY HBR | CHECKED BY NEW | ESTIMATED BY HBR | CHECKED BY NEW | IN CHARGE OF H. Daniel Rose

HC 47-20 (5/88)

4487

| FED. ROAD REG. NO. | STATE | FEDERAL AID PROJECT NO. | SHEET NO. | TOTAL SHEETS |
|---|---|---|---|---|
| 1 | N.Y. | | 12 | 30 |

COUNTY ROUTE 25A OVER KINDERHOOK CREEK

TOWN OF STUYVESANT, COLUMBIA COUNTY

P.I.N. 8754.55 B.I.N. 3342250

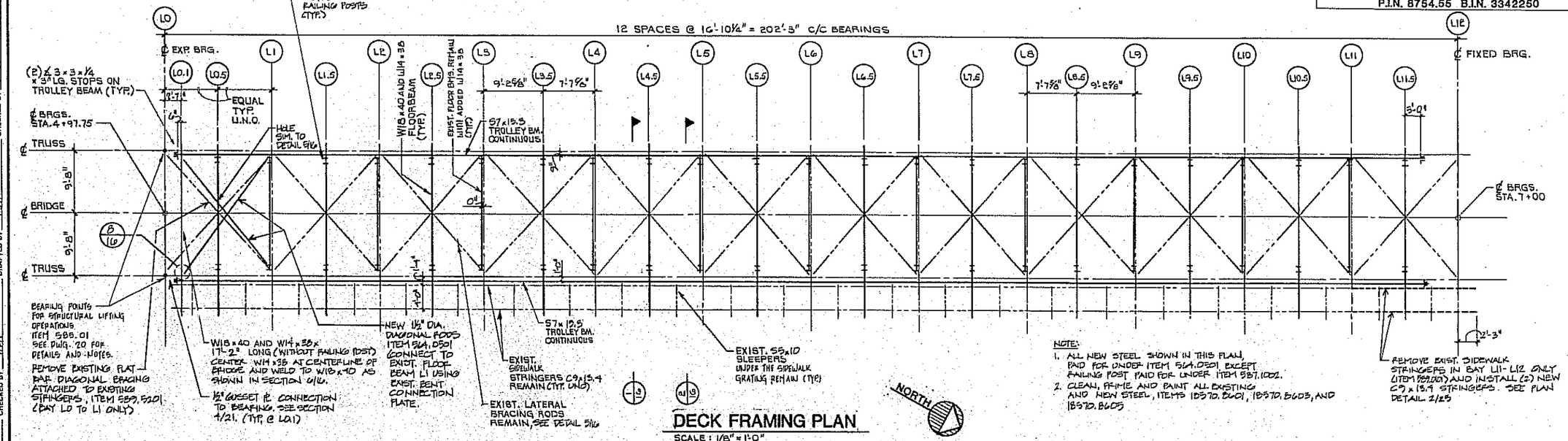


## DECK FRAMING PLAN

SCALE: 1/8" = 1'-0"

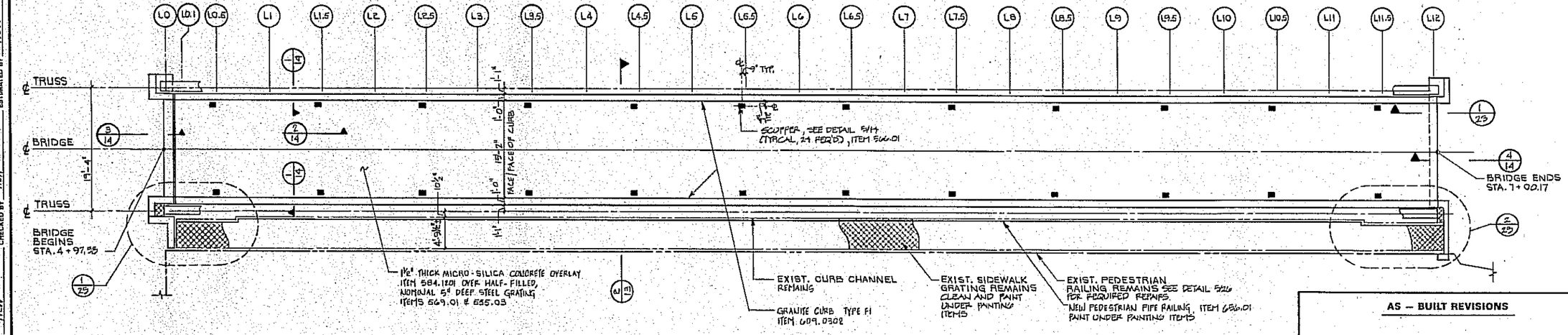


## DECK PLAN

SCALE: 1/8" = 1'-0"

STEEL GRATING SPECIFICATION ITEM 569.01

1. Grating shall be fabricated from ASTM A588 steel and shall be hot dipped galvanized, in accordance with Material Specification 719.01.
2. Main bearing bars shall be nominal 5 inches deep spaced at 6 inches on center.
3. One supplemental bar shall be equally spaced between each main bearing bar.
4. Cross bars (nominal 2 inches deep) shall be spaced at 4 inches on center.
5. #3 reinforcing bars (ASTM A615 Gr.60) shall be spaced between each bearing bar.
6. Minimum 20 gage galvanized steel pan forms shall be placed at approximate mid-depth.
7. Weight of steel grating shall be approximately 20.4 psf. Weight of steel grating with concrete fill (half depth) shall be approximately 50 psf.
8. Minimum section properties shall be as follows: (inches cubed per foot)
   - Steel only, top 4.7
   - Steel only, bottom 4.0
   - Composite, positive bending, concrete 74.4
   - Composite, positive bending, steel 5.2
9. Grating shall span continuously over a minimum of 3 spans.

Ryan-Biggs Associates, P.C.
291 River Street
Troy, New York 12180
(518) 272-6255

AS – BUILT REVISIONS

SIGNATURE DATE

# DECK PLANS

STATE OF NEW YORK
DEPARTMENT OF TRANSPORTATION

| DRAWING NO. | SCALE | DATE | REGION |
|---|---|---|---|
| 12 | AS NOTED | 7-23-02 | 8 |

HC 47-2b (5/88)

IN CHARGE OF H. Dwight Rogers DESIGNED BY NEW CHECKED BY HDR DRAFTED BY HDR CHECKED BY HDR ESTIMATED BY NEW CHECKED BY NEW DATE

4457

| FED. ROAD REG. NO. | STATE | FEDERAL AID PROJECT NO. | SHEET NO. | TOTAL SHEETS |
|---|---|---|---|---|
| 1 | N.Y. | | 13 | 30 |

COUNTY ROUTE 25A OVER KINDERHOOK CREEK

TOWN OF STUYVESANT, COLUMBIA COUNTY

P.I.N. 8754.55 B.I.N. 3342250

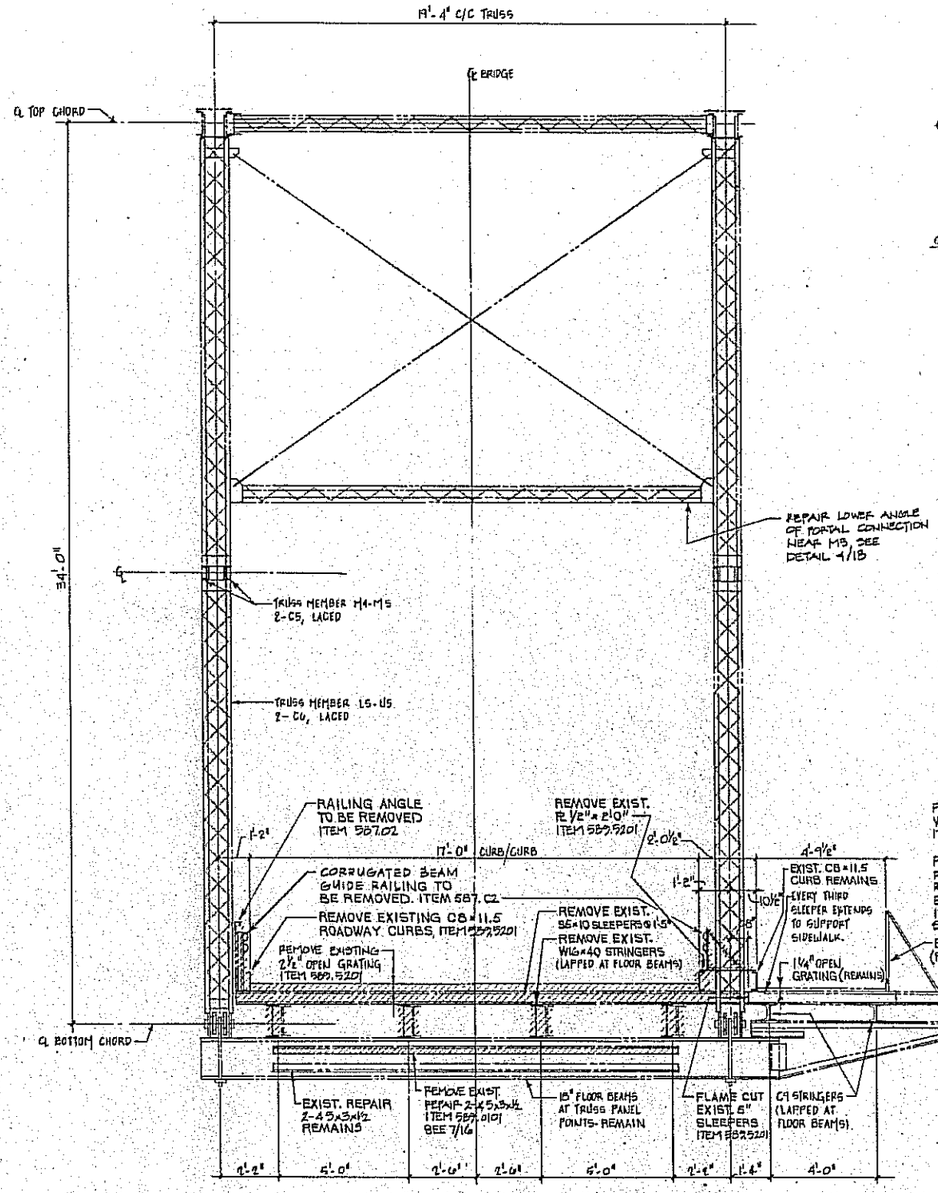


## 1/13 EXISTING SECTION AT PANEL L5-U5

SCALE: 3/8" = 1'-0"

NOTE: ▨ DENOTES MATERIAL TO BE REMOVED

THE CORRUGATED BEAM GUIDE RAILING AND POST SHALL BE REMOVED AND STOCKED UNDER ITEM 587.02. THE 2 EXIST. REPAIR ANGLES (ATTACHED TO EACH EXIST. FLOORBEAM) SHALL BE REMOVED AND STOCKED UNDER ITEM 559.0101. ALL OTHER BRIDGE DECK COMPONENTS SHOWN TO BE REMOVED (INCLUDING GRATING, SLEEPERS, CURB CHANNELS, AND STRINGERS) SHALL BE REMOVED AND STOCKED UNDER ITEM 559.5201. THE PAYMENT UNIT FOR ITEM 559.5201 SHALL BE FOR REMOVAL OF ONE (1) DECKED DECK. MATERIAL REMOVED UNDER ITEMS 559.5201 AND 559.0101 AS WELL AS ITEM 587.02 SHALL BE NEATLY STACKED AT THE PROJECT SITE FOR PICK-UP BY COLUMBIA COUNTY D.P.W. AND THE MATERIAL SHALL REMAIN THE PROPERTY OF COLUMBIA COUNTY.

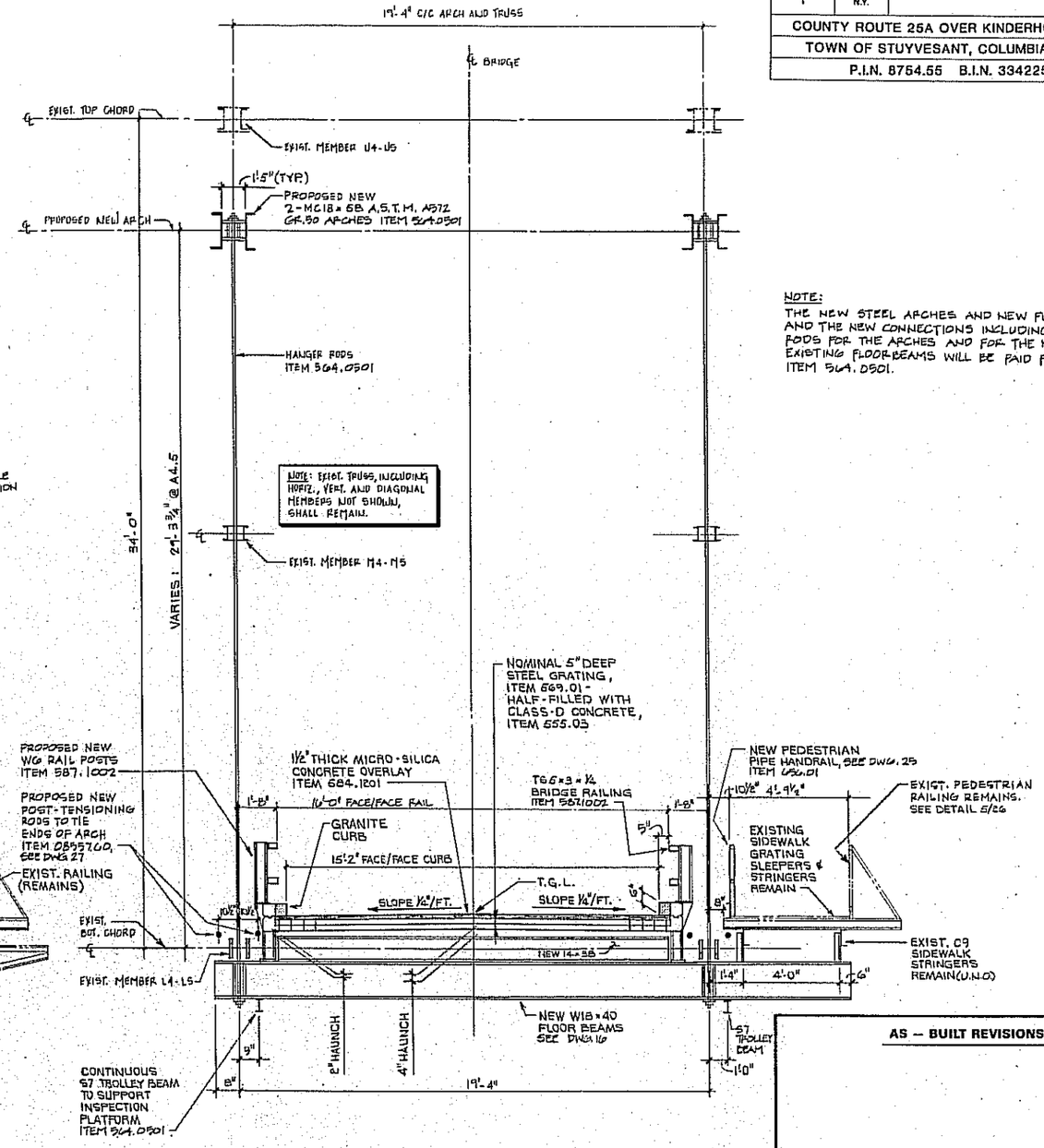


## 2/13 PROPOSED SECTION AT PANEL L4.5-A4.5

SCALE: 3/8" = 1'-0"

NOTE:

THE NEW STEEL ARCHES AND NEW FLOORBEAMS AND THE NEW CONNECTIONS INCLUDING HANGER RODS FOR THE ARCHES AND FOR THE NEW AND EXISTING FLOORBEAMS WILL BE PAID FOR UNDER ITEM 564.0501.

AS - BUILT REVISIONS

SIGNATURE DATE

# TYPICAL BRIDGE SECTIONS

STATE OF NEW YORK
DEPARTMENT OF TRANSPORTATION

| DRAWING NO. | SCALE | DATE | REGION |
|---|---|---|---|
| 13 | 3/8" = 1'-0" | 7-23-02 | 8 |

Ryan-Biggs Associates, P.C.
291 River Street
Troy, New York 12180
(518) 272-6266

DESIGNED BY NEW CHECKED BY NEW DRAFTED BY RBA CHECKED BY NEW ESTIMATED BY NEW DATE

HC 47-2b (5/88)

IN CHARGE OF H. Daniel Rogers

4487

| FED. ROAD REG. NO. | STATE | FEDERAL AID PROJECT NO. | SHEET NO. | TOTAL SHEETS |
|---|---|---|---|---|
| 1 | N.Y. | | 16 | 30 |

COUNTY ROUTE 25A OVER KINDERHOOK CREEK

TOWN OF STUYVESANT, COLUMBIA COUNTY

P.I.N. 8754.55 B.I.N. 3342250

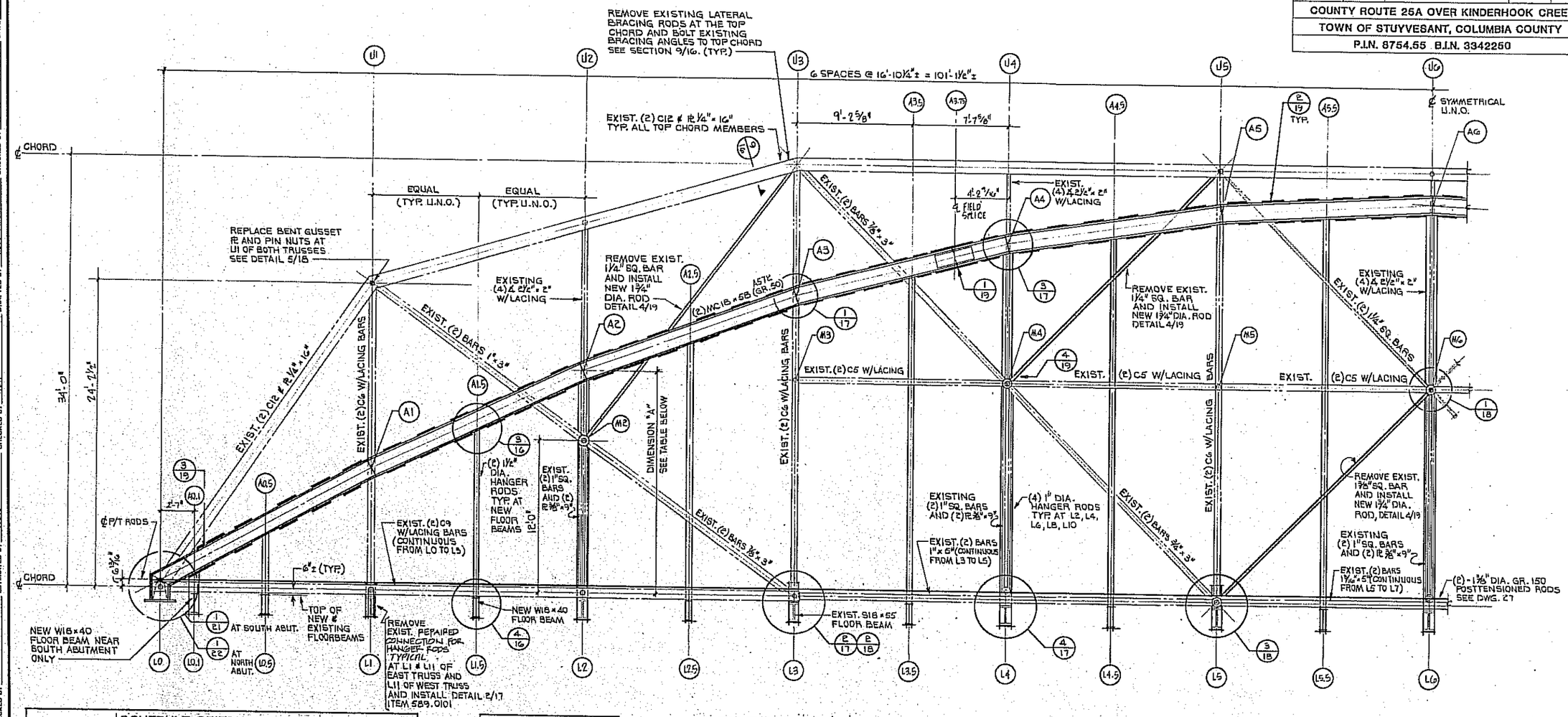


## ELEVATION – EAST TRUSS

## WEST TRUSS SIMILAR

SCALE : 1/4" = 1'-0"

NOTE :

1. FIELD SPLICE OF ARCHES WILL BE PERMITTED ONLY AT LOCATIONS SHOWN. (AT A3.75 AND A8.25)
2. FOR LOCATION OF BATTEN PLATES SEE DETAILS 5, 6 AND 7 ON DWG. 19.
3. ALL HANGER RODS AND SUPPORT RODS FOR FLOORBEAMS SHALL BE TENSIONED TO LEVEL EACH BEAM AND TO PROVIDE A LEVEL ROADWAY PROFILE BEFORE FILLING STEEL GRATING WITH CONCRETE. (THE DOWNWARD DEFLECTION DUE TO CONCRETE DEAD LOAD WILL BE OFFSET BY UPWARD DEFLECTION DUE TO POSTTENSIONING.)

### SCHEDULE OF TRUSS DETAILS

| DETAIL | DESCRIPTION | SHOWN AT JOINT | USE AT |
|---|---|---|---|
| 1/17 | ARCH CONN. AT EXIST. C6 VERTICALS | A3 | A1, A3, A5, A7, A9, A11 |
| 2/17 | HANGER CONN. AT EXIST. FLOORBEAMS | L3 | L1, L3, L5, L7, L9, L11 |
| 3/17 | ARCH CONN. AT EXIST. VERTICALS | A4 | A2, A4, A6, A8, A10 |
| 4/17 | HANGER CONN. AT EXIST. FLOORBEAMS | L4 | L2, L4, L6, L8, L10 |
| 3/16 | ARCH. CONN. AT NEW HANGER RODS | A1.5 | ALL NEW FLOORBEAMS |
| 4/16 | HANGER CONN. AT NEW FLOORBEAMS | L1.5 | ALL NEW FLOORBEAMS |
| 1/19 | ARCH FIELD SPLICE | A3.75 | A3.75 AND A8.25 |
| 2/19 AND 3/19 | ARCH BATTEN PLATES | — | THROUGHOUT LENGTH OF ARCH |
| 4/19 | CONN. FOR NEW DIAGONALS | M4 | M2, M4, M6, M8 M10, U3, U5, U7, U9, L5, L7 |
| 1/18 | REINF. OF MIDDLE JOINTS | M6 | M4, M6, M8 |
| 2/18 | REINF. OF LOWER CHORD JOINTS | L3 | L3 AND L9 |
| 3/18 | REINF. OF LOWER CHORD JOINTS | L5 | L5 AND L7 |
| 1/21 | BEARING DETAIL | L0 | SOUTH ABUTMENT |
| 1/22 | BEARING DETAIL | L12 | NORTH ABUTMENT |

### ARCH CENTERLINE

| LOCATION | DIMENSION "A" |
|---|---|
| A0 | 6 13/16" |
| A0.5 | 5-15/32" |
| A1 | 9'-7½" |
| A1.5 | 13'-6 3/32" |
| A2 | 17'-6" |
| A2.5 | 20'-6 3/32" |
| A3 | 23'-7½" |
| A3.5 | 26'-0 9/16" |
| FIELD SPLICE | 26'-10 7/8" |
| A4 | 28'-0" |
| A4.5 | 29'-3¾" |
| A5 | 30'-7½" |
| A5.5 | 31'-0 3/4" |
| A6 | 31'-6" |

NOTE : ALL DETAILS APPLY TO BOTH TRUSSES

AS – BUILT REVISIONS

SIGNATURE DATE

## TRUSS ELEVATION

STATE OF NEW YORK
DEPARTMENT OF TRANSPORTATION

Ryan-Biggs Associates, P.C.
291 River Street
Troy, New York 12180
(518) 272-0266

| DRAWING NO. | SCALE | DATE | REGION |
|---|---|---|---|
| 16 | 1/4" = 1'-0" | 7-23-02 | 8 |

1157

ESTIMATED BY NEW CHECKED BY NEW DRAFTED BY RBA CHECKED BY HOR DESIGNED BY BMB CHECKED BY DATE

HC-47-2b (5/88) IN CHARGE OF H. Dennis Rogers

# Appendix C

## LOAD RATING AND LOAD POSTING

**Page SK-1, Elevation Sketch**
**Pages C-1 to C-7, Member Loads with HS20 Live Load**
**Pages C-8 to C-12, HS Inventory Rating**
**Pages C-13 to C-17, HS Operating Rating**
**Pages C-18 to C-24, Member Loads with H20 Live Load**
**Pages C-25 to C-29, H Operating Rating and Load Posting**

**STUYVESANT FALLS BRIDGE** **RB 4487-1**
**RIGHT (UPSTREAM, EAST) TRUSS** **NW**
**MEMBER LOADS FROM RISA ANALYSIS**
**HS 20 LIVE LOAD**
**NOTE: POS = COMPRESSION, NEG = TENSION**

| | MEMBER KIM - RB | MEMBER DESCRIPTION | DEAD LOAD + POST-TENSION KIPS | DEAD + LIVE + PT + HS 20 TRUCK (NO IMPACT) KIPS | DEAD + LIVE + PT + LANE LOAD 18 KIP (NO IMPACT) KIPS | DEAD + LIVE + PT + LANE LOAD 26 KIP (NO IMPACT) KIPS | IMPACT FACTOR | LIVE LOAD + IMPACT HS 20 KIPS | DEAD + PT + LIVE + IMPACT HS 20 KIPS |
|---|---|---|---|---|---|---|---|---|---|
| TOP CHORD, END POSTS | K1-L0-U1 | (2) C12 X 20.7 + PLATE 1/4 X 16 | **46.45** | 91.79 | 95.46 | ----- | 1.153 | **56.51** | 102.96 |
| | K2-U1-U2 | | **43.22** | 90.81 | 94.41 | ----- | 1.153 | **59.02** | 102.25 |
| | K3-U2-U3 | | **43.22** | 90.81 | 94.41 | ----- | 1.153 | **59.02** | 102.25 |
| | K4-U3-U4 | | **52.74** | 109.65 | 115.49 | ----- | 1.153 | **72.35** | 125.09 |
| | K5-U4-U5 | | **52.74** | 109.65 | 115.49 | ----- | 1.153 | **72.35** | 125.09 |
| | K6-U5-U6 | | **54.99** | 110.64 | 120.30 | ----- | 1.153 | **75.30** | 130.29 |
| | K7-U6-U7 | | **54.99** | 110.64 | 120.30 | ----- | 1.153 | **75.30** | 130.29 |
| | K8-U7-U8 | | **52.70** | 109.60 | 115.46 | ----- | 1.153 | **72.36** | 125.06 |
| | K9-U8-U9 | | **52.70** | 109.60 | 115.46 | ----- | 1.153 | **72.36** | 125.06 |
| | K10-U9-U10 | | **43.20** | 90.78 | 94.40 | ----- | 1.153 | **59.04** | 102.24 |
| | K11-U10-U11 | | **43.20** | 90.78 | 94.40 | ----- | 1.153 | **59.04** | 102.24 |
| | K12-U11-L12 | | **46.01** | 91.36 | 95.01 | ----- | 1.153 | **56.49** | 102.50 |

| | MEMBER KIM - RB | MEMBER DESCRIPTION | DEAD LOAD + POST-TENSION KIPS | DEAD + LIVE + PT + HS 20 TRUCK (NO IMPACT) KIPS | DEAD + LIVE + PT + LANE LOAD 18 KIP (NO IMPACT) KIPS | DEAD + LIVE + PT + LANE LOAD 26 KIP (NO IMPACT) KIPS | IMPACT FACTOR | LIVE LOAD + IMPACT HS 20 KIPS | DEAD + PT + LIVE + IMPACT HS 20 KIPS |
|---|---|---|---|---|---|---|---|---|---|
| VERTICALS, TYPE 01 | K13-U1-A1 | (2) C6x8.2 | **-12.89** | -40.60 | -30.93 | -35.54 | 1.300 | **-36.02** | -48.91 |
| | K14-U11-A11 | | **-12.37** | -40.08 | -30.39 | -34.99 | 1.300 | **-36.02** | -48.39 |
| | K15-A1-L1 | | **-10.71** | -30.65 | -25.34 | -30.33 | 1.300 | **-25.92** | -36.63 |
| | K16-A11-L11 | | **-10.71** | -30.65 | -25.34 | -30.33 | 1.300 | **-25.92** | -36.63 |
| VERTICALS, TYPE 02 | K17-U2-A2 | (4) L 2 1/2 X 2 X 1/4 | **1.62** | 1.62 | 1.62 | 1.62 | 1.300 | **0.00** | 1.62 |
| | K18-U10-A10 | | **1.62** | 1.62 | 1.62 | 1.62 | 1.300 | **0.00** | 1.62 |
| | K19-A2-M2 | | **-8.67** | -11.13<br>5.77 | -11.51 | -12.51 | 1.300<br>1.300 | **-5.00**<br>**18.76** | -13.66<br>10.09 |
| | K20-A10-M10 | | **-8.54** | -11.12<br>5.90 | -11.36 | -12.51 | 1.300<br>1.300 | **-5.16**<br>**18.77** | -13.70<br>10.23 |
| VERTICALS, TYPE 01 | K21-U3-A3 | (2) C6x8.2 | **4.18** | 17.95<br>-10.47 | 10.81 | 12.29<br>-1.85 | 1.300<br>1.300 | **17.90**<br>**-19.04** | 22.08<br>-14.86 |
| | K22-U9-A9 | | **4.30** | 17.99<br>-10.34 | 10.96 | 12.44<br>-1.70 | 1.300<br>1.300 | **17.80**<br>**-19.03** | 22.10<br>-14.73 |
| | K23-A3-M3 | | **-2.04** | -12.16<br>12.94 | -1.88<br>9.15 | -4.90<br>11.02 | 1.300<br>1.300 | **-13.15**<br>**19.48** | -15.19<br>17.43 |
| | K24-A9-M9 | | **-1.92** | -12.04<br>13.05 | -1.76<br>9.28 | -4.78<br>11.14 | 1.300<br>1.300 | **-13.15**<br>**19.47** | -15.07<br>17.55 |
| | K25-M3-L3 | | **-1.50** | -11.62<br>13.48 | -1.34<br>9.69 | -4.36<br>11.56 | 1.300<br>1.300 | **-13.15**<br>**19.48** | -14.65<br>17.97 |
| | K26-M9-L9 | | **-1.38** | -11.50<br>13.59 | -1.22<br>9.82 | -4.24<br>11.68 | 1.300<br>1.300 | **-13.15**<br>**19.47** | -14.53<br>18.09 |
| VERTICALS, TYPE 02 | K27-U4-A4 | (4) L 2 1/2 X 2 X 1/4 | **1.58** | 1.58 | 1.58 | 1.58 | 1.300 | **0.00** | 1.58 |
| | K28-U8-A8 | | **1.58** | 1.58 | 1.58 | 1.58 | 1.300 | **0.00** | 1.58 |
| | K29-A4-M4 | | **-7.61** | -12.14<br>10.43 | -9.56 | -10.25<br>0.78 | 1.300<br>1.300 | **-5.89**<br>**23.45** | -13.50<br>15.84 |
| | K30-A8-M8 | | **-7.66** | -12.18<br>10.37 | -9.58 | -10.27<br>0.76 | 1.300<br>1.300 | **-5.89**<br>**23.43** | -13.54<br>15.78 |
| | K31-U5-A5 | | **4.09** | 22.91 | 11.20 | 13.49 | 1.300 | **24.48** | 28.56 |

**MEMBER LOADS WITH HS20 LIVE LOAD**

| | MEMBER KIM - RB | MEMBER DESCRIPTION | DEAD LOAD + POST-TENSION KIPS | DEAD + LIVE + PT + HS 20 TRUCK (NO IMPACT) KIPS | DEAD + LIVE + PT + LANE LOAD 18 KIP (NO IMPACT) KIPS | DEAD + LIVE + PT + LANE LOAD 26 KIP (NO IMPACT) KIPS | IMPACT FACTOR | LIVE LOAD + IMPACT HS 20 KIPS | DEAD + PT + LIVE + IMPACT HS 20 KIPS |
|---|---|---|---|---|---|---|---|---|---|
| VERTICALS, TYPE 01 | | (2) C6x8.2 | | | | | | | |
| | K32-U7-A7 | | **4.13** | 22.98 | 11.25 | 13.54 | 1.300 | **24.50** | 28.63 |
| | K33-A5-M5 | | **-2.89** | -5.01<br>18.88 | -0.74<br>8.72 | -1.32<br>11.96 | 1.300<br>1.300 | **-2.75**<br>**28.30** | -5.64<br>25.41 |
| | K34-A7-M7 | | **-2.81** | -5.00<br>18.96 | -0.72<br>8.75 | -1.29<br>11.99 | 1.300<br>1.300 | **-2.84**<br>**28.30** | -5.65<br>25.49 |
| | K35-M5-L5 | | **-2.19** | -4.31<br>19.58 | -0.04<br>9.42 | -0.62<br>12.66 | 1.300<br>1.300 | **-2.75**<br>**28.30** | -4.94<br>26.11 |
| | K36-M7-L7 | | **-2.11** | -4.30<br>19.66 | -0.02<br>9.45 | -0.59<br>12.69 | 1.300<br>1.300 | **-2.84**<br>**28.30** | -4.95<br>26.19 |
| VERTICALS, TYPE 02 | K37-U6-A6 | (4) L 2 1/2 X 2 X 1/4 | **1.58** | 1.58 | 1.58 | 1.58 | 1.300 | **0.00** | 1.58 |
| | K38-A6-M6 | | **-7.40** | -10.62<br>8.27 | -8.45 | -8.79<br>0.88 | 1.300<br>1.300 | **-4.19**<br>**20.36** | -11.58<br>12.96 |
| | K39-A0-A0.5 | | **237.23** | 253.07 | 260.23 | ----- | 1.153 | **26.52** | 263.75 |
| | K40-A0.5-A1 | | **229.23** | 245.07 | 249.66 | ----- | 1.153 | **23.56** | 252.79 |
| | K41-A1-A1.5 | | **229.46** | 245.16 | 251.82 | ----- | 1.153 | **25.79** | 255.25 |
| | K42-A1.5-A2 | | **224.51** | 240.22 | 245.38 | ----- | 1.153 | **24.05** | 248.57 |
| | K43-A2-A2.5 | | **219.94** | 234.75 | 240.53 | ----- | 1.153 | **23.74** | 243.68 |
| | K44-A2.5-A3 | | **215.94** | 230.76 | 235.20 | ----- | 1.153 | **22.21** | 238.15 |
| | K45-A3-A3.5 | | **213.64** | 228.38 | 234.50 | ----- | 1.153 | **24.05** | 237.69 |
| | K46-A3.5-AS1 | | **210.78** | 225.52 | 230.44 | ----- | 1.153 | **22.67** | 233.44 |
| | K47-AS1-A4 | | **210.62** | 225.36 | 230.28 | ----- | 1.153 | **22.67** | 233.28 |
| | K48-A4-A4.5 | | **208.51** | 223.62 | 228.46 | ----- | 1.153 | **23.00** | 231.51 |
| | K49-A4.5-A5 | | **206.71** | 220.87 | 225.68 | ----- | 1.153 | **21.87** | 228.58 |

**MEMBER LOADS WITH HS20 LIVE LOAD**

| | MEMBER KIM - RB | MEMBER DESCRIPTION | DEAD LOAD + POST-TENSION KIPS | DEAD + LIVE + PT + HS 20 TRUCK (NO IMPACT) KIPS | DEAD + LIVE + PT + LANE LOAD 18 KIP (NO IMPACT) KIPS | DEAD + LIVE + PT + LANE LOAD 26 KIP (NO IMPACT) KIPS | IMPACT FACTOR | LIVE LOAD + IMPACT HS 20 KIPS | DEAD + PT + LIVE + IMPACT HS 20 KIPS |
|---|---|---|---|---|---|---|---|---|---|
| ARCH | K50-A5-A5.5 | (2) MC18 x 58 | **205.83** | 220.39 | 225.30 | ----- | 1.153 | **22.45** | 228.28 |
| | K51-A5.5-A6 | | **205.22** | 219.09 | 224.29 | ----- | 1.153 | **21.98** | 227.20 |
| | K52-A6-A6.5 | | **205.23** | 219.09 | 224.29 | ----- | 1.153 | **21.98** | 227.20 |
| | K53-A6.5-A7 | | **205.83** | 220.39 | 225.30 | ----- | 1.153 | **22.44** | 228.28 |
| | K54-A7-A7.5 | | **206.70** | 220.86 | 225.68 | ----- | 1.153 | **21.88** | 228.58 |
| | K55-A7.5-A8 | | **208.51** | 223.62 | 228.46 | ----- | 1.153 | **23.01** | 231.51 |
| | K56-A8-AS2 | | **210.62** | 225.37 | 230.28 | ----- | 1.153 | **22.66** | 233.28 |
| | K57-AS2-A8.5 | | **210.79** | 225.54 | 230.44 | ----- | 1.153 | **22.66** | 233.45 |
| | K58-A8.5-A9 | | **213.65** | 228.39 | 234.50 | ----- | 1.153 | **24.05** | 237.69 |
| | K59-A9-A9.5 | | **215.95** | 230.76 | 235.21 | ----- | 1.153 | **22.21** | 238.16 |
| | K60-A9.5-A10 | | **219.95** | 234.76 | 240.53 | ----- | 1.153 | **23.74** | 243.68 |
| | K61-A10-A10.5 | | **224.47** | 240.18 | 245.32 | ----- | 1.153 | **24.05** | 248.51 |
| | K62-A10.5-A11 | | **229.41** | 245.12 | 251.77 | ----- | 1.153 | **25.78** | 255.19 |
| | K63-A11-A11.5 | | **229.42** | 245.26 | 249.86 | ----- | 1.153 | **23.56** | 252.99 |
| | K64-A11.5-A12 | | **234.95** | 250.78 | 257.00 | ----- | 1.153 | **25.43** | 260.37 |

**MEMBER LOADS WITH HS20 LIVE LOAD**

| | MEMBER KIM - RB | MEMBER DESCRIPTION | DEAD LOAD + POST-TENSION KIPS | DEAD + LIVE + PT + HS 20 TRUCK (NO IMPACT) KIPS | DEAD + LIVE + PT + LANE LOAD 18 KIP (NO IMPACT) KIPS | DEAD + LIVE + PT + LANE LOAD 26 KIP (NO IMPACT) KIPS | IMPACT FACTOR | LIVE LOAD + IMPACT HS 20 KIPS | DEAD + PT + LIVE + IMPACT HS 20 KIPS |
|---|---|---|---|---|---|---|---|---|---|
| HORIZONTAL, TYPE 01 | K65-M3-M4 | (2) C5 x 6.7 | **0.00** | 0.00 | 0.00 | 0.00 | 1.220 | **0.00** | 0.00 |
| | K66-M4-M5 | | **-3.82** | -14.18<br>0.67 | -13.88 | -15.08 | 1.220<br>1.220 | **-13.73**<br>**5.48** | -17.55<br>1.65 |
| | K67-M5-M6 | | **-3.82** | -14.18<br>0.67 | -13.88 | -15.08 | 1.220<br>1.220 | **-13.73**<br>**5.48** | -17.55<br>1.65 |
| | K68-M6-M7 | | **-3.78** | -14.14<br>0.71 | -13.88 | -15.08 | 1.220<br>1.220 | **-13.79**<br>**5.48** | -17.57<br>1.69 |
| | K69-M7-M8 | | **-3.78** | -14.14<br>0.71 | -13.88 | -15.08 | 1.220<br>1.220 | **-13.79**<br>**5.48** | -17.57<br>1.69 |
| | K70-M8-M9 | | **0.00** | 0.00 | 0.00 | 0.00 | 1.220 | **0.00** | 0.00 |
| VERTICALS, TYPE 03 | K71-M2-L2 | (2) BARS 1 - SQ + (2) PL 3/3 X 9 | **-10.62** | -30.21 | -25.06 | -29.95 | 1.300 | **-25.46** | -36.08 |
| | K72-M10-L10 | | **-10.62** | -30.21 | -25.06 | -29.95 | 1.300 | **-25.46** | -36.08 |
| | K73-M4-L4 | | **-10.27** | -30.12 | -24.69 | -29.65 | 1.300 | **-25.80** | -36.07 |
| | K74-M8-L8 | | **-10.27** | -30.12 | -24.69 | -29.65 | 1.300 | **-25.80** | -36.07 |
| | K75-M6-L6 | | **-10.82** | -30.81 | -25.48 | -30.48 | 1.300 | **-25.98** | -36.80 |
| DIAGONAL, TYPE 01 | K76-U1-M2 | (2) BARS 1 X 3 | **-18.48** | -47.18 | -46.38 | -49.96 | 1.160 | **-36.51** | -54.99 |
| | K77-U11-M10 | | **-18.76** | -47.46 | -46.69 | -50.26 | 1.160 | **-36.54** | -55.30 |
| DIAGONAL, TYPE 02 | K78-M2-L3 | (2) BARS 7/8 X 3 | **-16.81** | -44.30 | -42.33 | -45.59 | 1.170 | **-33.67** | -50.48 |
| | K79-M10-L9 | | **-17.01** | -44.50 | -42.54 | -45.80 | 1.170 | **-33.68** | -50.69 |
| DIAGONAL, TYPE 03 | K80-U3-M2 | 1 3/4-IN DIA ROD 1992 | **-2.10** | -19.36 | -11.34 | -14.49 | 1.300 | **-22.44** | -24.54 |
| | K81-U9- M10 | | **-2.20** | -19.47 | -11.45 | -14.60 | 1.300 | **-22.44** | -24.64 |

**MEMBER LOADS WITH HS20 LIVE LOAD**

| | MEMBER KIM - RB | MEMBER DESCRIPTION | DEAD LOAD + POST-TENSION KIPS | DEAD + LIVE + PT + HS 20 TRUCK (NO IMPACT) KIPS | DEAD + LIVE + PT + LANE LOAD 18 KIP (NO IMPACT) KIPS | DEAD + LIVE + PT + LANE LOAD 26 KIP (NO IMPACT) KIPS | IMPACT FACTOR | LIVE LOAD + IMPACT HS 20 KIPS | DEAD + PT + LIVE + IMPACT HS 20 KIPS |
|---|---|---|---|---|---|---|---|---|---|
| DIAGONAL, TYPE 02 | K82-U3-M4 | (2) BARS 7/8 X 3 | **-17.78** | -51.28 | -43.97 | -47.65 | 1.180 | **-39.53** | -57.31 |
| | K83-U9-M8 | | **-17.83** | -51.33 | -44.05 | -47.73 | 1.180 | **-39.53** | -57.36 |
| DIAGONAL, TYPE 04 | K84-M4-L5 | (2) BARS 3/4 X 3 | **-12.35** | -43.00 | -32.12 | -35.54 | 1.190 | **-36.48** | -48.83 |
| | K85-M8-L7 | | **-12.46** | -43.11 | -32.21 | -35.63 | 1.190 | **-36.47** | -48.93 |
| DIAGONAL, TYPE 03 | K86-U5-M4 | 1 3/4-IN DIA ROD 1992 | **0.00** | -11.32 | -1.73 | -3.80 | 1.300 | **-14.72** | -14.72 |
| | K87-U7-M8 | | **0.00** | -11.29 | -1.72 | -3.78 | 1.300 | **-14.67** | -14.67 |
| DIAGONAL, TYPE 05 | K88-U5-M6 | (2) BARS 1 1/4 SQ | **-3.19** | -29.70 | -13.21 | -16.43 | 1.210 | **-32.08** | -35.27 |
| | K89-U7-M6 | | **-3.25** | -29.79 | -13.27 | -16.50 | 1.210 | **-32.12** | -35.36 |
| DIAGONAL, TYPE 06 | K90-M6-L5 | 1 3/4-IN DIA ROD 1992 | **0.00** | -19.64 | -4.73 | -7.13 | 1.220 | **-23.96** | -23.96 |
| | K91-M6-L7 | | **0.00** | -19.58 | -4.68 | -7.08 | 1.220 | **-23.88** | -23.88 |
| BOTTOM CHORD, TYPE 01 | K92-L0-L1 | (2) C9 x 13.4 | **-26.54** | -52.45 | -54.54 | ----- | 1.153 | **-32.29** | -58.83 |
| | K93-L11-L12 | | **-26.29** | -52.20 | -54.29 | ----- | 1.153 | **-32.28** | -58.57 |
| | K94-L1-L2 | | **-26.54** | -52.45 | -54.54 | ----- | 1.153 | **-32.29** | -58.83 |
| | K95-L10-L11 | | **-26.29** | -52.20 | -54.29 | ----- | 1.153 | **-32.28** | -58.57 |
| | K96-L2-L3 | | **-26.54** | -52.45 | -54.54 | ----- | 1.153 | **-32.29** | -58.83 |
| | K97-L9-L10 | | **-26.29** | -52.20 | -54.29 | ----- | 1.153 | **-32.28** | -58.57 |

**MEMBER LOADS WITH HS20 LIVE LOAD**

| | MEMBER KIM - RB | MEMBER DESCRIPTION | DEAD LOAD + POST-TENSION KIPS | DEAD + LIVE + PT + HS 20 TRUCK (NO IMPACT) KIPS | DEAD + LIVE + PT + LANE LOAD 18 KIP (NO IMPACT) KIPS | DEAD + LIVE + PT + LANE LOAD 26 KIP (NO IMPACT) KIPS | IMPACT FACTOR | LIVE LOAD + IMPACT HS 20 KIPS | DEAD + PT + LIVE + IMPACT HS 20 KIPS |
|---|---|---|---|---|---|---|---|---|---|
| BOTTOM CHORD, TYPE 02 | K98-L3-L4 | (2) BARS 1 X 5 | **-40.23** | -81.30 | -87.08 | ----- | 1.153 | **-54.02** | -94.25 |
| | K99-L8-L9 | | **-40.15** | -81.22 | -87.00 | ----- | 1.153 | **-54.02** | -94.17 |
| | K100-L4-L5 | | **-40.23** | -81.30 | -87.08 | ----- | 1.153 | **-54.02** | -94.25 |
| | K101-L7-L8 | | **-40.15** | -81.22 | -87.00 | ----- | 1.153 | **-54.02** | -94.17 |
| BOTTOM CHORD, TYPE 03 | K102-L5-L6 | (2) BARS 1 3/16 X 5 | **-48.92** | -94.47 | -104.42 | ----- | 1.153 | **-64.00** | -112.91 |
| | K103-L6-L7 | | **-48.92** | -94.47 | -104.42 | ----- | 1.153 | **-64.00** | -112.91 |
| PT RODS | K104-PT ROD | 1 3/8" DIA. | **-102.61** | -109.63 | -112.15 | ----- | 1.153 | **-10.99** | -113.61 |
| FLOORBEAM HANGERS | FB HANGERS AT HALF-PANELS | (2) - 1 1/2" DIA. | **-9.19** | -29.48 | -24.02 | -29.09 | 1.300 | **-26.38** | -35.57 |
| | FB HANGERS AT ODD-PANELS | (2) - 1 1/2" DIA. | **-9.62** | -29.91 | -24.45 | -29.52 | 1.300 | **-26.38** | -36.00 |
| | FB HANGERS AT EVEN-PANELS | (4) - 1" DIA. | **-9.19** | -29.48 | -24.02 | -29.09 | 1.300 | **-26.38** | -35.57 |
| BEARINGS | TRUSS BEARING | BRG | **38.12** | 75.33 | ----- | 82.84 | 1.153 | **51.56** | 89.68 |
| | ARCH BEARING | BRG | **119.23** | 136.96 | ----- | 142.77 | 1.153 | **27.14** | 146.37 |

**MEMBER LOADS WITH HS20 LIVE LOAD**

**STUYVESANT FALLS BRIDGE** **RB 4487-1**
**NW**

**HS INVENTORY RATING**

**NOTE: POS = COMPRESSION, NEG = TENSION**

| | MEMBER KIM - RB | MEMBER DESCRIPTION | DEAD LOAD + POST-TENSION KIPS | LIVE LOAD + IMPACT HS 20 KIPS | MEMBER INVENTORY CAPACITY INCLUDING 10 PERCENT REDUCTION KIPS | CONNECTION INVENTORY CAPACITY (WHERE GOVERNING) KIPS | CAPACITY REDUCTION FOR CONNECTION OR CORROSION | INVENTORY RATING FACTOR | HS INVENTORY RATING HS- | COMMENTS OR GOVERNING CONDITION AT CONNECTION |
|---|---|---|---|---|---|---|---|---|---|---|
| TOP CHORD, END POSTS | K1-L0-U1 | (2) C12 X 20.7 + PLATE 1/4 X 16 | 46.45 | 56.51 | 156.24 | 119.20 | 0.763 | 1.287 | 25.75 | RIVET SHEAR AT JOINT U1 |
| | K2-U1-U2 | | 43.22 | 59.02 | 170.62 | 119.20 | 0.699 | 1.287 | 25.75 | RIVET SHEAR AT JOINT U1 |
| | K3-U2-U3 | | 43.22 | 59.02 | 170.62 | 107.30 | 0.629 | 1.086 | 21.71 | RIVET SHEAR AT JOINT U3 |
| | K4-U3-U4 | | 52.74 | 72.35 | 171.24 | 131.10 | 0.766 | 1.083 | 21.66 | RIVET SHEAR AT JOINT U3 |
| | K5-U4-U5 | | 52.74 | 72.35 | 171.24 | 131.10 | 0.766 | 1.083 | 21.66 | RIVET SHEAR AT JOINT U5 |
| | K6-U5-U6 | | 54.99 | 75.30 | 171.24 | 131.10 | 0.766 | 1.011 | 20.22 | RIVET SHEAR AT JOINT U5 |
| | K7-U6-U7 | | 54.99 | 75.30 | 171.24 | 131.10 | 0.766 | 1.011 | 20.22 | RIVET SHEAR AT JOINT U7 |
| | K8-U7-U8 | | 52.70 | 72.36 | 171.24 | 131.10 | 0.766 | 1.084 | 21.67 | RIVET SHEAR AT JOINT U7 |
| | K9-U8-U9 | | 52.70 | 72.36 | 171.24 | 131.10 | 0.766 | 1.084 | 21.67 | RIVET SHEAR AT JOINT U9 |
| | K10-U9-U10 | | 43.20 | 59.04 | 170.62 | 95.40 | 0.559 | **0.884** | **17.68** | **MISSING RIVET, RUSTED PLATE AT U9, LEFT TRUSS** |
| | K11-U10-U11 | | 43.20 | 59.04 | 170.62 | 119.20 | 0.699 | 1.287 | 25.75 | RIVET SHEAR AT JOINT U11 |
| | K12-U11-L12 | | 46.01 | 56.49 | 156.24 | 119.20 | 0.763 | 1.296 | 25.91 | RIVET SHEAR AT JOINT U11 |
| VERTICALS, TYPE 01 | K13-U1-A1 | (2) C6x8.2 | -12.89 | -36.02 | -54.43 | -51.30 | 0.942 | 1.066 | 21.33 | NET AREA AT PIN AT JOINT U1 |
| | K14-U11-A11 | | -12.37 | -36.02 | -54.43 | -51.30 | 0.942 | 1.081 | 21.61 | NET AREA AT PIN AT JOINT U11 |
| | K15-A1-L1 | | -10.71 | -25.92 | -54.43 | ----- | 1.000 | 1.687 | 33.74 | |
| | K16-A11-L11 | | -10.71 | -25.92 | -54.43 | ----- | 1.000 | 1.687 | 33.74 | |

| | MEMBER KIM - RB | MEMBER DESCRIPTION | DEAD LOAD + POST-TENSION KIPS | LIVE LOAD + IMPACT HS 20 KIPS | MEMBER INVENTORY CAPACITY INCLUDING 10 PERCENT REDUCTION KIPS | CONNECTION INVENTORY CAPACITY (WHERE GOVERNING) KIPS | CAPACITY REDUCTION FOR CONNECTION OR CORROSION | INVENTORY RATING FACTOR | HS INVENTORY RATING HS- | COMMENTS OR GOVERNING CONDITION AT CONNECTION |
|---|---|---|---|---|---|---|---|---|---|---|
| VERTICALS, TYPE 02 | K17-U2-A2 | (4) L 2 1/2 X 2 X 1/4 | 1.62 | 0.00 | 32.49 | ----- | 1.000 | 20.056 | ----- | |
| | K18-U10-A10 | | 1.62 | 0.00 | 32.49 | ----- | 1.000 | 20.056 | ----- | |
| | K19-A2-M2 | | -8.67 | -5.00<br>18.76 | -50.27<br>41.42 | -15.80<br>---- | 0.314<br>1.000 | 1.427<br>2.670 | 28.54<br>53.40 | INSIDE GUSSET PLATE AT<br>M2 RUSTED THROUGH |
| | K20-A10-M10 | | -8.54 | -5.16<br>18.77 | -50.27<br>41.42 | -31.50<br>---- | 0.627<br>1.000 | 4.450<br>2.662 | 88.99<br>53.25 | NET AREA AT PIN<br>AT JOINT M10 |
| VERTICALS, TYPE 01 | K21-U3-A3 | (2) C6x8.2 | 4.18 | 17.90<br>-19.03 | 44.61<br>-54.43 | -----<br>-28.40 | 1.000<br>0.522 | 2.259<br>1.712 | 45.18<br>34.24 | NET AREA AT PIN<br>AT JOINT U3 |
| | K22-U9-A9 | | 4.30 | 17.80<br>-19.03 | 44.61<br>-54.43 | -----<br>-28.40 | 1.000<br>0.522 | 2.264<br>1.719 | 45.29<br>34.37 | NET AREA AT PIN<br>AT JOINT U9 |
| | K23-A3-M3 | | -2.04 | -13.15<br>19.48 | -54.43<br>46.44 | ----- | 1.000 | 3.985<br>2.489 | 79.70<br>49.78 | |
| | K24-A9-M9 | | -1.92 | -13.15<br>19.47 | -54.43<br>46.44 | ----- | 1.000 | 3.993<br>2.484 | 79.87<br>49.68 | |
| | K25-M3-L3 | | -1.50 | -13.15<br>19.48 | -54.43<br>39.41 | ----- | 1.000 | 4.026<br>2.100 | 80.52<br>42.01 | |
| | K26-M9-L9 | | -1.38 | -13.15<br>19.47 | -54.43<br>39.41 | ----- | 1.000 | 4.034<br>2.095 | 80.69<br>41.90 | |
| VERTICALS, TYPE 02 | K27-U4-A4 | (4) L 2 1/2 X 2 X 1/4 | 1.58 | 0.00 | 40.93 | ----- | 1.000 | 25.905 | ----- | |
| | K28-U8-A8 | | 1.58 | 0.00 | 40.93 | ----- | 1.000 | 25.905 | ----- | |
| | K29-A4-M4 | | -7.61 | -5.89<br>23.45 | -50.27<br>33.65 | ----- | 1.000 | 7.247<br>1.760 | 144.93<br>35.19 | |
| | K30-A8-M8 | | -7.66 | -5.89<br>23.43 | -50.27<br>33.65 | ----<br>13.30 | 1.000<br>0.395 | 7.240<br>**0.894** | 144.79<br>**17.89** | **BENT MEMBER** |
| VERTICALS, TYPE 01 | K31-U5-A5 | (2) C6x8.2 | 4.09 | 24.48 | 47.36 | ----- | 1.000 | 1.768 | 35.36 | |
| | K32-U7-A7 | | 4.13 | 24.50 | 47.36 | ----- | 1.000 | 1.764 | 35.29 | |
| | K33-A5-M5 | | -2.89 | -2.75<br>28.30 | -54.43<br>42.38 | ----- | 1.000 | 18.753<br>1.600 | 375.06<br>31.99 | |
| | K34-A7-M7 | | -2.81 | -2.84<br>28.30 | -54.43<br>42.38 | ----- | 1.000 | 18.180<br>1.597 | 363.61<br>31.94 | |
| | K35-M5-L5 | | -2.19 | -2.75<br>28.30 | -54.43<br>39.41 | ----- | 1.000 | 19.008<br>1.470 | 380.15<br>29.40 | |
| | K36-M7-L7 | | -2.11 | -2.84<br>28.30 | -54.43<br>39.41 | ----- | 1.000 | 18.427<br>1.467 | 368.54<br>29.35 | |

**HS INVENTORY RATING**

| | MEMBER KIM - RB | MEMBER DESCRIPTION | DEAD LOAD + POST-TENSION KIPS | LIVE LOAD + IMPACT HS 20 KIPS | MEMBER INVENTORY CAPACITY INCLUDING 10 PERCENT REDUCTION KIPS | CONNECTION INVENTORY CAPACITY (WHERE GOVERNING) KIPS | CAPACITY REDUCTION FOR CONNECTION OR CORROSION | INVENTORY RATING FACTOR | HS INVENTORY RATING HS- | COMMENTS OR GOVERNING CONDITION AT CONNECTION |
|---|---|---|---|---|---|---|---|---|---|---|
| VERTICALS, TYPE 02 | K37-U6-A6 | (4) L 2 1/2 X 2 X 1/4 | 1.58 | 0.00 | 43.48 | ----- | 1.000 | 27.519 | ----- | |
| | K38-A6-M6 | | -7.40 | -4.19<br>20.36 | -50.27<br>26.00 | ----- | 1.000 | 10.242<br>1.640 | 204.84<br>32.80 | |
| ARCH | K39-A0-A0.5 | (2) MC18 x 58 | 237.23 | 26.52 | **Note A** | ----- | 1.000 | 1.240 | 24.80 | RATING TYPICAL FOR ARCH MEMBERS |
| | K64-A11.5-A12 | | 237.23 | 26.52 | **Note A** | ----- | 1.000 | 1.240 | 24.80 | |
| HORIZONTAL, TYPE 01 | K65-M3-M4 | (2) C5 x 6.7 | 0.00 | 0.00 | 28.58 | ----- | 1.000 | ----- | ----- | |
| | K66-M4-M5 | | -3.82 | -13.73<br>5.48 | -42.98<br>28.58 | -28.00 | 0.651 | 1.761<br>4.097 | 35.22<br>81.94 | PLATE NET AREA AT JOINT M5 |
| | K67-M5-M6 | | -3.82 | -13.73<br>5.48 | -42.98<br>28.58 | -28.00 | 0.651 | 1.761<br>4.097 | 35.22<br>81.94 | PLATE NET AREA AT JOINT M5 |
| | K68-M6-M7 | | -3.78 | -13.79<br>5.48 | -42.98<br>28.58 | -28.00 | 0.651 | 1.756<br>4.090 | 35.12<br>81.81 | PLATE NET AREA AT JOINT M7 |
| | K69-M7-M8 | | -3.78 | -13.79<br>5.48 | -42.98<br>28.58 | -28.00 | 0.651 | 1.756<br>4.090 | 35.12<br>81.81 | PLATE NET AREA AT JOINT M7 |
| | K70-M8-M9 | | 0.00 | 0.00 | 28.58 | ----- | 1.000 | ----- | ----- | |
| VERTICALS, TYPE 03 | K71-M2-L2 | (2) BARS 1 - SQ + (2) PL 3/3 X 9 | -10.62 | -25.46 | -49.19 | ----- | 1.000 | 1.515 | 30.30 | CAPACITY BASED ON (4) -1-IN DIAMETER RODS 1992 |
| | K72-M10-L10 | | -10.62 | -25.46 | -49.19 | ----- | 1.000 | 1.515 | 30.30 | |
| | K73-M4-L4 | | -10.27 | -25.80 | -49.19 | ----- | 1.000 | 1.509 | 30.17 | |
| | K74-M8-L8 | | -10.27 | -25.80 | -49.19 | ----- | 1.000 | 1.509 | 30.17 | |
| | K75-M6-L6 | | -10.82 | -25.98 | -49.19 | ----- | 1.000 | 1.477 | 29.53 | |
| DIAGONAL, TYPE 01 | K76-U1-M2 | (2) BARS 1 X 3 | -18.48 | -36.51 | -75.60 | ----- | 1.000 | 1.564 | 31.29 | |
| | K77-U11-M10 | | -18.76 | -36.54 | -75.60 | ----- | 1.000 | 1.556 | 31.11 | |
| DIAGONAL, TYPE 02 | K78-M2-L3 | (2) BARS 7/8 X 3 | -16.81 | -33.67 | -66.08 | -57.80 | 0.875 | 1.218 | 24.35 | RUSTED EYEBAR NET AREA AT JOINT L3 |
| | K79-M10-L9 | | -17.01 | -33.68 | -66.08 | -57.80 | 0.875 | 1.211 | 24.22 | RUSTED EYEBAR NET AREA AT JOINT L9 |

**HS INVENTORY RATING**

| | MEMBER KIM - RB | MEMBER DESCRIPTION | DEAD LOAD + POST-TENSION KIPS | LIVE LOAD + IMPACT HS 20 KIPS | MEMBER INVENTORY CAPACITY INCLUDING 10 PERCENT REDUCTION KIPS | CONNECTION INVENTORY CAPACITY (WHERE GOVERNING) KIPS | CAPACITY REDUCTION FOR CONNECTION OR CORROSION | INVENTORY RATING FACTOR | HS INVENTORY RATING HS- | COMMENTS OR GOVERNING CONDITION AT CONNECTION |
|---|---|---|---|---|---|---|---|---|---|---|
| DIAGONAL, TYPE 03 | K80-U3-M2 | 1 3/4-IN DIA ROD 1992 | -2.10 | -22.44 | -37.67 | ----- | 1.000 | 1.585 | 31.71 | |
| | K81-U9- M10 | | -2.20 | -22.44 | -37.67 | ----- | 1.000 | 1.580 | 31.61 | |
| DIAGONAL, TYPE 02 | K82-U3-M4 | (2) BARS 7/8 X 3 | -17.78 | -39.53 | -66.08 | ----- | 1.000 | 1.222 | 24.44 | |
| | K83-U9-M8 | | -17.83 | -39.53 | -66.08 | ----- | 1.000 | 1.221 | 24.41 | |
| DIAGONAL, TYPE 04 | K84-M4-L5 | (2) BARS 3/4 X 3 | -12.35 | -36.48 | -56.70 | -52.50 | 0.926 | 1.101 | 22.01 | RUSTED EYEBAR NET AREA AT JOINT L5 |
| | K85-M8-L7 | | -12.46 | -36.47 | -56.70 | -52.50 | 0.926 | 1.098 | 21.96 | RUSTED EYEBAR NET AREA AT JOINT L7 |
| DIAGONAL, TYPE 03 | K86-U5-M4 | 1 3/4-IN DIA ROD 1992 | 0.00 | -14.72 | -37.67 | ----- | 1.000 | 2.559 | 51.19 | |
| | K87-U7-M8 | | 0.00 | -14.67 | -37.67 | ----- | 1.000 | 2.567 | 51.35 | |
| DIAGONAL, TYPE 05 | K88-U5-M6 | (2) BARS 1 1/4 SQ | -3.19 | -32.08 | -39.48 | ----- | 1.000 | 1.131 | 22.63 | |
| | K89-U7-M6 | | -3.25 | -32.12 | -39.48 | ----- | 1.000 | 1.128 | 22.56 | |
| DIAGONAL, TYPE 06 | K90-M6-L5 | 1 3/4-IN DIA ROD 1992 | 0.00 | -23.96 | -37.67 | ----- | 1.000 | 1.572 | 31.45 | |
| | K91-M6-L7 | | 0.00 | -23.88 | -37.67 | ----- | 1.000 | 1.577 | 31.55 | |
| BOTTOM CHORD, TYPE 01 | K92-L0-L1 | (2) C9 x 13.4 | -26.54 | -32.29 | -93.38 | -64.50 | 0.691 | 1.176 | 23.51 | WEB PERFORATION IN CHANNEL AT L1 |
| | K93-L11-L12 | | -26.29 | -32.28 | -93.38 | -36.50 | 0.391 | **0.316** | **6.33** | **SEVERE CORROSION AT CHANNEL SPLICE AT L11** |
| | K94-L1-L2 | | -26.54 | -32.29 | -93.38 | -64.50 | 0.691 | 1.176 | 23.51 | WEB PERFORATION IN CHANNEL AT L1 |
| | K95-L10-L11 | | -26.29 | -32.28 | -93.38 | -36.50 | 0.391 | **0.316** | **6.33** | **SEVERE CORROSION AT CHANNEL SPLICE AT L11** |
| | K96-L2-L3 | | -26.54 | -32.29 | -93.38 | -57.60 | 0.617 | **0.962** | **19.24** | **PACK RUST AT L3** |
| | K97-L9-L10 | | -26.29 | -32.28 | -93.38 | -43.20 | 0.463 | **0.524** | **10.48** | **SEVERE PACK RUST AT L9** |

**HS INVENTORY RATING**

| | MEMBER KIM - RB | MEMBER DESCRIPTION | DEAD LOAD + POST-TENSION KIPS | LIVE LOAD + IMPACT HS 20 KIPS | MEMBER INVENTORY CAPACITY INCLUDING 10 PERCENT REDUCTION KIPS | CONNECTION INVENTORY CAPACITY (WHERE GOVERNING) KIPS | CAPACITY REDUCTION FOR CONNECTION OR CORROSION | INVENTORY RATING FACTOR | HS INVENTORY RATING HS- | COMMENTS OR GOVERNING CONDITION AT CONNECTION |
|---|---|---|---|---|---|---|---|---|---|---|
| BOTTOM CHORD, TYPE 02 | K98-L3-L4 | (2) BARS 1 X 5 | -40.23 | -54.02 | -126.00 | -105.00 | 0.833 | 1.199 | 23.98 | RUSTED EYEBAR NET AREA AT JOINT L3 |
| | K99-L8-L9 | | -40.15 | -54.02 | -126.00 | -105.00 | 0.833 | 1.201 | 24.01 | RUSTED EYEBAR NET AREA AT JOINT L9 |
| | K100-L4-L5 | | -40.23 | -54.02 | -126.00 | -105.00 | 0.833 | 1.199 | 23.98 | RUSTED EYEBAR NET AREA AT JOINT L5 |
| | K101-L7-L8 | | -40.15 | -54.02 | -126.00 | -105.00 | 0.833 | 1.201 | 24.01 | RUSTED EYEBAR NET AREA AT JOINT L7 |
| BOTTOM CHORD, TYPE 03 | K102-L5-L6 | (2) BARS 1 3/16 X 5 | -48.92 | -64.00 | -149.66 | -131.00 | 0.875 | 1.283 | 25.65 | RUSTED EYEBAR NET AREA AT JOINT L5 |
| | K103-L6-L7 | | -48.92 | -64.00 | -149.66 | -131.00 | 0.875 | 1.283 | 25.65 | RUSTED EYEBAR NET AREA AT JOINT L7 |
| PT RODS | K104-PT ROD | 1 3/8" DIA. | -102.61 | -10.99 | -127.98 | ----- | 1.000 | 2.308 | 46.15 | |
| FLOORBEAM HANGERS | FB HANGERS AT HALF-PANELS | (2) - 1 1/2" DIA. | -9.19 | -26.38 | -55.35 | -48.60 | 0.878 | 1.494 | 29.88 | ROD RUSTED DOWN TO 1.25 INCH DIAMETER |
| | FB HANGERS AT ODD-PANELS | (2) - 1 1/2" DIA. | -9.62 | -26.38 | -55.35 | -48.60 | 0.878 | 1.478 | 29.55 | ROD RUSTED DOWN TO 1.25 INCH DIAMETER |
| | FB HANGERS AT EVEN-PANELS | (4) - 1" DIA. | -9.19 | -26.38 | -49.19 | ----- | 1.000 | 1.516 | 30.33 | |
| BEARINGS | TRUSS BEARING | BRG | 38.12 | 51.56 | 120.00 | 90.00 | 0.750 | 1.006 | 20.12 | PIN BEARING AT RUSTED PLATES |
| | ARCH BEARING | BRG | 119.23 | 27.14 | 160.00 | ----- | 1.000 | 1.502 | 30.04 | ELASTOMER COMPRESSION |

**NOTE A: FOR ARCH MEMBER LOAD RATING, SEE CALCULATIONS FOR COMBINED AXIAL PLUS MOMENT.**
**FLOOR BEAM INVENTORY RATING = HS 29.57**
**ALL RATINGS BASED ON RIGHT (UPSTREAM, EAST) TRUSS, UNLESS NOTED OTHERWISE**

**GOVERNING INVENTORY RATING = HS 6.33 FOR DETERIORATED BOTTOM CHORD SPLICE AT RIGHT TRUSS, JOINT L11**

**HS INVENTORY RATING**

**STUYVESANT FALLS BRIDGE** **RB 4487-1**
**NW**

**HS OPERATING RATING**

**NOTE: POS = COMPRESSION, NEG = TENSION**

| | MEMBER KIM - RB | MEMBER DESCRIPTION | DEAD LOAD + POST-TENSION KIPS | LIVE LOAD + IMPACT HS 20 KIPS | MEMBER OPERATING CAPACITY INCLUDING 10 PERCENT REDUCTION KIPS | CONNECTION OPERATING CAPACITY (WHERE GOVERNING) KIPS | CAPACITY REDUCTION FOR CONNECTION OR CORROSION | OPERATING RATING FACTOR | HS OPERATING RATING HS- | COMMENTS OR GOVERNING CONDITION AT CONNECTION |
|---|---|---|---|---|---|---|---|---|---|---|
| TOP CHORD, END POSTS | K1-L0-U1 | (2) C12 X 20.7 + PLATE 1/4 X 16 | 46.45 | 56.51 | 194.79 | 159.00 | 0.816 | 1.992 | 39.83 | RIVET SHEAR AT JOINT U1 |
| | K2-U1-U2 | | 43.22 | 59.02 | 212.77 | 159.00 | 0.747 | 1.962 | 39.23 | RIVET SHEAR AT JOINT U1 |
| | K3-U2-U3 | | 43.22 | 59.02 | 212.77 | 143.10 | 0.673 | 1.692 | 33.84 | RIVET SHEAR AT JOINT U3 |
| | K4-U3-U4 | | 52.74 | 72.35 | 213.54 | 174.90 | 0.819 | 1.689 | 33.77 | RIVET SHEAR AT JOINT U3 |
| | K5-U4-U5 | | 52.74 | 72.35 | 213.54 | 174.90 | 0.819 | 1.689 | 33.77 | RIVET SHEAR AT JOINT U5 |
| | K6-U5-U6 | | 54.99 | 75.30 | 213.54 | 174.90 | 0.819 | 1.592 | 31.85 | RIVET SHEAR AT JOINT U5 |
| | K7-U6-U7 | | 54.99 | 75.30 | 213.54 | 174.90 | 0.819 | 1.592 | 31.85 | RIVET SHEAR AT JOINT U7 |
| | K8-U7-U8 | | 52.70 | 72.36 | 213.54 | 174.90 | 0.819 | 1.689 | 33.78 | RIVET SHEAR AT JOINT U7 |
| | K9-U8-U9 | | 52.70 | 72.36 | 213.54 | 174.90 | 0.819 | 1.689 | 33.78 | RIVET SHEAR AT JOINT U9 |
| | K10-U9-U10 | | 43.20 | 59.04 | 212.77 | 127.20 | 0.598 | **1.423** | **28.46** | **MISSING RIVET, RUSTED PLATE AT U9, LEFT TRUSS** |
| | K11-U10-U11 | | 43.20 | 59.04 | 212.77 | 159.00 | 0.747 | 1.962 | 39.23 | RIVET SHEAR AT JOINT U11 |
| | K12-U11-L12 | | 46.01 | 56.49 | 194.79 | 159.00 | 0.816 | 2.000 | 40.00 | RIVET SHEAR AT JOINT U11 |
| VERTICALS, TYPE 01 | K13-U1-A1 | (2) C6x8.2 | -12.89 | -36.02 | -75.81 | -71.50 | 0.943 | 1.627 | 32.54 | NET AREA AT PIN AT JOINT U1 |
| | K14-U11-A11 | | -12.37 | -36.02 | -75.81 | -71.50 | 0.943 | 1.642 | 32.83 | NET AREA AT PIN AT JOINT U11 |
| | K15-A1-L1 | | -10.71 | -25.92 | -75.81 | ----- | 1.000 | 2.512 | 50.24 | |
| | K16-A11-L11 | | -10.71 | -25.92 | -75.81 | ----- | 1.000 | 2.512 | 50.24 | |

| | MEMBER KIM - RB | MEMBER DESCRIPTION | DEAD LOAD + POST-TENSION KIPS | LIVE LOAD + IMPACT HS 20 KIPS | MEMBER OPERATING CAPACITY INCLUDING 10 PERCENT REDUCTION KIPS | CONNECTION OPERATING CAPACITY (WHERE GOVERNING) KIPS | CAPACITY REDUCTION FOR CONNECTION OR CORROSION | OPERATING RATING FACTOR | HS OPERATING RATING HS- | COMMENTS OR GOVERNING CONDITION AT CONNECTION |
|---|---|---|---|---|---|---|---|---|---|---|
| VERTICALS, TYPE 02 | K17-U2-A2 | (4) L 2 1/2 X 2 X 1/4 | 1.62 | 0.00 | 40.48 | ----- | 1.000 | 24.988 | ----- | |
| | K18-U10-A10 | | 1.62 | 0.00 | 40.48 | ----- | 1.000 | 24.988 | ----- | |
| | K19-A2-M2 | | -8.67 | -5.00<br>18.76 | -70.02<br>51.65 | -21.20<br>---- | 0.303<br>1.000 | 2.507<br>3.215 | 50.14<br>64.31 | INSIDE GUSSET PLATE AT M2 RUSTED THROUGH |
| | K20-A10-M10 | | -8.54 | -5.16<br>18.77 | -70.02<br>51.65 | -43.90<br>---- | 0.627<br>1.000 | 6.853<br>3.207 | 137.05<br>64.15 | NET AREA AT PIN AT JOINT M10 |
| VERTICALS, TYPE 01 | K21-U3-A3 | (2) C6x8.2 | 4.18 | 17.90<br>-19.03 | 55.62<br>-75.81 | -----<br>-39.50 | 1.000<br>0.521 | 2.874<br>2.295 | 57.48<br>45.90 | NET AREA AT PIN AT JOINT U3 |
| | K22-U9-A9 | | 4.30 | 17.80<br>-19.03 | 55.62<br>-75.81 | -----<br>-39.50 | 1.000<br>0.521 | 2.883<br>2.302 | 57.66<br>46.04 | NET AREA AT PIN AT JOINT U9 |
| | K23-A3-M3 | | -2.04 | -13.15<br>19.48 | -75.81<br>57.91 | ----- | 1.000 | 5.612<br>3.078 | 112.23<br>61.56 | |
| | K24-A9-M9 | | -1.92 | -13.15<br>19.47 | -75.81<br>57.91 | ----- | 1.000 | 5.619<br>3.073 | 112.39<br>61.46 | |
| | K25-M3-L3 | | -1.50 | -13.15<br>19.48 | -75.81<br>49.13 | ----- | 1.000 | 5.653<br>2.600 | 113.05<br>51.99 | |
| | K26-M9-L9 | | -1.38 | -13.15<br>19.47 | -75.81<br>49.13 | ----- | 1.000 | 5.661<br>2.594 | 113.21<br>51.89 | |
| VERTICALS, TYPE 02 | K27-U4-A4 | (4) L 2 1/2 X 2 X 1/4 | 1.58 | 0.00 | 51.04 | ----- | 1.000 | 32.304 | ----- | |
| | K28-U8-A8 | | 1.58 | 0.00 | 51.04 | ----- | 1.000 | 32.304 | ----- | |
| | K29-A4-M4 | | -7.61 | -5.89<br>23.45 | -70.02<br>41.94 | ----- | 1.000 | 10.602<br>2.113 | 212.03<br>42.26 | |
| | K30-A8-M8 | | -7.66 | -5.89<br>23.43 | -70.02<br>41.94 | ----<br>17.30 | 1.000<br>0.412 | 10.595<br>**1.065** | 211.90<br>**21.30** | **BENT MEMBER** |
| VERTICALS, TYPE 01 | K31-U5-A5 | (2) C6x8.2 | 4.09 | 24.48 | 59.07 | ----- | 1.000 | 2.247 | 44.93 | |
| | K32-U7-A7 | | 4.13 | 24.50 | 59.07 | ----- | 1.000 | 2.242 | 44.85 | |
| | K33-A5-M5 | | -2.89 | -2.75<br>28.30 | -75.81<br>52.84 | ----- | 1.000 | 26.533<br>1.969 | 530.65<br>39.38 | |
| | K34-A7-M7 | | -2.81 | -2.84<br>28.30 | -75.81<br>52.84 | ----- | 1.000 | 25.711<br>1.967 | 514.22<br>39.33 | |
| | K35-M5-L5 | | -2.19 | -2.75<br>28.30 | -75.81<br>49.13 | ----- | 1.000 | 26.787<br>1.813 | 535.75<br>36.27 | |
| | K36-M7-L7 | | -2.11 | -2.84<br>28.30 | -75.81<br>49.13 | ----- | 1.000 | 25.957<br>1.811 | 519.15<br>36.22 | |

**HS OPERATING RATING**

| | MEMBER KIM - RB | MEMBER DESCRIPTION | DEAD LOAD + POST-TENSION KIPS | LIVE LOAD + IMPACT HS 20 KIPS | MEMBER OPERATING CAPACITY INCLUDING 10 PERCENT REDUCTION KIPS | CONNECTION OPERATING CAPACITY (WHERE GOVERNING) KIPS | CAPACITY REDUCTION FOR CONNECTION OR CORROSION | OPERATING RATING FACTOR | HS OPERATING RATING HS- | COMMENTS OR GOVERNING CONDITION AT CONNECTION |
|---|---|---|---|---|---|---|---|---|---|---|
| VERTICALS, TYPE 02 | K37-U6-A6 | (4) L 2 1/2 X 2 X 1/4 | 1.58 | 0.00 | 54.22 | ----- | 1.000 | 34.316 | ----- | |
| | K38-A6-M6 | | -7.40 | -4.19<br>20.36 | -70.02<br>32.38 | ----- | 1.000 | 14.960<br>1.954 | 299.20<br>39.07 | |
| ARCH | K39-A0-A0.5 | (2) MC18 x 58 | 237.23 | 26.52 | **Note A** | ----- | 1.000 | 2.020 | 40.40 | RATING TYPICAL FOR ARCH MEMBERS |
| | K64-A11.5-A12 | | 237.23 | 26.52 | **Note A** | ----- | 1.000 | 2.020 | 40.40 | |
| HORIZONTAL, TYPE 01 | K65-M3-M4 | (2) C5 x 6.7 | 0.00 | 0.00 | 35.61 | ----- | 1.000 | ----- | ----- | |
| | K66-M4-M5 | | -3.82 | -13.73<br>5.48 | -59.87<br>35.61 | -39.00 | 0.651 | 2.562<br>4.933 | 51.24<br>98.65 | |
| | K67-M5-M6 | | -3.82 | -13.73<br>5.48 | -59.87<br>35.61 | -39.00 | 0.651 | 2.562<br>4.933 | 51.24<br>98.65 | |
| | K68-M6-M7 | | -3.78 | -13.79<br>5.48 | -59.87<br>35.61 | -39.00 | 0.651 | 2.554<br>4.926 | 51.08<br>98.52 | |
| | K69-M7-M8 | | -3.78 | -13.79<br>5.48 | -59.87<br>35.61 | -39.00 | 0.651 | 2.554<br>4.926 | 51.08<br>98.52 | |
| | K70-M8-M9 | | 0.00 | 0.00 | 35.61 | ----- | 1.000 | ----- | ----- | |
| VERTICALS, TYPE 03 | K71-M2-L2 | (2) BARS 1 - SQ + (2) PL 3/3 X 9 | -10.62 | -25.46 | -67.01 | ----- | 1.000 | 2.215 | 44.29 | CAPACITY BASED ON (4) -1-IN DIAMETER RODS 1992 |
| | K72-M10-L10 | | -10.62 | -25.46 | -67.01 | ----- | 1.000 | 2.215 | 44.29 | |
| | K73-M4-L4 | | -10.27 | -25.80 | -67.01 | ----- | 1.000 | 2.199 | 43.99 | |
| | K74-M8-L8 | | -10.27 | -25.80 | -67.01 | ----- | 1.000 | 2.199 | 43.99 | |
| | K75-M6-L6 | | -10.82 | -25.98 | -67.01 | ----- | 1.000 | 2.163 | 43.25 | |
| DIAGONAL, TYPE 01 | K76-U1-M2 | (2) BARS 1 X 3 | -18.48 | -36.51 | -105.30 | ----- | 1.000 | 2.378 | 47.56 | |
| | K77-U11-M10 | | -18.76 | -36.54 | -105.30 | ----- | 1.000 | 2.368 | 47.37 | |
| DIAGONAL, TYPE 02 | K78-M2-L3 | (2) BARS 7/8 X 3 | -16.81 | -33.67 | -92.04 | -80.40 | 0.874 | 1.889 | 37.78 | RUSTED EYEBAR NET AREA AT JOINT L3 |
| | K79-M10-L9 | | -17.01 | -33.68 | -92.04 | -80.40 | 0.874 | 1.882 | 37.64 | RUSTED EYEBAR NET AREA AT JOINT L9 |

**HS OPERATING RATING**

| | MEMBER KIM - RB | MEMBER DESCRIPTION | DEAD LOAD + POST-TENSION KIPS | LIVE LOAD + IMPACT HS 20 KIPS | MEMBER OPERATING CAPACITY INCLUDING 10 PERCENT REDUCTION KIPS | CONNECTION OPERATING CAPACITY (WHERE GOVERNING) KIPS | CAPACITY REDUCTION FOR CONNECTION OR CORROSION | OPERATING RATING FACTOR | HS OPERATING RATING HS- | COMMENTS OR GOVERNING CONDITION AT CONNECTION |
|---|---|---|---|---|---|---|---|---|---|---|
| DIAGONAL, TYPE 03 | K80-U3-M2 | 1 3/4-IN DIA ROD 1992 | -2.10 | -22.44 | -51.31 | ----- | 1.000 | 2.193 | 43.87 | |
| | K81-U9- M10 | | -2.20 | -22.44 | -51.31 | ----- | 1.000 | 2.188 | 43.76 | |
| DIAGONAL, TYPE 02 | K82-U3-M4 | (2) BARS 7/8 X 3 | -17.78 | -39.53 | -92.04 | ----- | 1.000 | 1.879 | 37.57 | |
| | K83-U9-M8 | | -17.83 | -39.53 | -92.04 | ----- | 1.000 | 1.877 | 37.55 | |
| DIAGONAL, TYPE 04 | K84-M4-L5 | (2) BARS 3/4 X 3 | -12.35 | -36.48 | -78.98 | -73.10 | 0.926 | 1.665 | 33.31 | RUSTED EYEBAR NET AREA AT JOINT L5 |
| | K85-M8-L7 | | -12.46 | -36.47 | -78.98 | -73.10 | 0.926 | 1.663 | 33.25 | RUSTED EYEBAR NET AREA AT JOINT L7 |
| DIAGONAL, TYPE 03 | K86-U5-M4 | 1 3/4-IN DIA ROD 1992 | 0.00 | -14.72 | -51.31 | ----- | 1.000 | 3.486 | 69.72 | |
| | K87-U7-M8 | | 0.00 | -14.67 | -51.31 | ----- | 1.000 | 3.497 | 69.94 | |
| DIAGONAL, TYPE 05 | K88-U5-M6 | (2) BARS 1 1/4 SQ | -3.19 | -32.08 | -54.99 | ----- | 1.000 | 1.615 | 32.30 | |
| | K89-U7-M6 | | -3.25 | -32.12 | -54.99 | ----- | 1.000 | 1.611 | 32.22 | |
| DIAGONAL, TYPE 06 | K90-M6-L5 | 1 3/4-IN DIA ROD 1992 | 0.00 | -23.96 | -51.31 | ----- | 1.000 | 2.142 | 42.83 | |
| | K91-M6-L7 | | 0.00 | -23.88 | -51.31 | ----- | 1.000 | 2.149 | 42.97 | |
| BOTTOM CHORD, TYPE 01 | K92-L0-L1 | (2) C9 x 13.4 | -26.54 | -32.29 | -130.07 | -89.80 | 0.690 | 1.959 | 39.18 | WEB PERFORATION IN CHANNEL AT L1 |
| | K93-L11-L12 | | -26.29 | -32.28 | -130.07 | -49.10 | 0.377 | **0.707** | **14.13** | **SEVERE CORROSION AT CHANNEL SPLICE AT L11** |
| | K94-L1-L2 | | -26.54 | -32.29 | -130.07 | -89.80 | 0.690 | 1.959 | 39.18 | WEB PERFORATION IN CHANNEL AT L1 |
| | K95-L10-L11 | | -26.29 | -32.28 | -130.07 | -49.10 | 0.377 | **0.707** | **14.13** | **SEVERE CORROSION AT CHANNEL SPLICE AT L11** |
| | K96-L2-L3 | | -26.54 | -32.29 | -130.07 | -80.10 | 0.616 | **1.659** | **33.18** | **PACK RUST AT L3** |
| | K97-L9-L10 | | -26.29 | -32.28 | -130.07 | -60.10 | 0.462 | **1.047** | **20.95** | **SEVERE PACK RUST AT L9** |

**HS OPERATING RATING**

| | MEMBER KIM - RB | MEMBER DESCRIPTION | DEAD LOAD + POST-TENSION KIPS | LIVE LOAD + IMPACT HS 20 KIPS | MEMBER OPERATING CAPACITY INCLUDING 10 PERCENT REDUCTION KIPS | CONNECTION OPERATING CAPACITY (WHERE GOVERNING) KIPS | CAPACITY REDUCTION FOR CONNECTION OR CORROSION | OPERATING RATING FACTOR | HS OPERATING RATING HS- | COMMENTS OR GOVERNING CONDITION AT CONNECTION |
|---|---|---|---|---|---|---|---|---|---|---|
| BOTTOM CHORD, TYPE 02 | K98-L3-L4 | (2) BARS 1 X 5 | -40.23 | -54.02 | -175.50 | -146.00 | 0.832 | 1.958 | 39.16 | RUSTED EYEBAR NET AREA AT JOINT L3 |
| | K99-L8-L9 | | -40.15 | -54.02 | -175.50 | -146.00 | 0.832 | 1.960 | 39.19 | RUSTED EYEBAR NET AREA AT JOINT L9 |
| | K100-L4-L5 | | -40.23 | -54.02 | -175.50 | -146.00 | 0.832 | 1.958 | 39.16 | RUSTED EYEBAR NET AREA AT JOINT L5 |
| | K101-L7-L8 | | -40.15 | -54.02 | -175.50 | -146.00 | 0.832 | 1.960 | 39.19 | RUSTED EYEBAR NET AREA AT JOINT L7 |
| BOTTOM CHORD, TYPE 03 | K102-L5-L6 | (2) BARS 1 3/16 X 5 | -48.92 | -64.00 | -208.46 | -183.00 | 0.878 | 2.095 | 41.90 | RUSTED EYEBAR NET AREA AT JOINT L5 |
| | K103-L6-L7 | | -48.92 | -64.00 | -208.46 | -183.00 | 0.878 | 2.095 | 41.90 | RUSTED EYEBAR NET AREA AT JOINT L7 |
| PT RODS | K104-PT ROD | 1 3/8" DIA. | -102.61 | -10.99 | -170.64 | ----- | 1.000 | 6.188 | 123.77 | |
| FLOORBEAM HANGERS | FB HANGERS AT HALF-PANELS | (2) - 1 1/2" DIA. | -9.19 | -26.38 | -75.38 | -66.30 | 0.880 | 2.165 | 43.30 | ROD RUSTED DOWN TO 1.25 INCH DIAMETER |
| | FB HANGERS AT ODD-PANELS | (2) - 1 1/2" DIA. | -9.62 | -26.38 | -75.38 | -66.30 | 0.880 | 2.149 | 42.97 | ROD RUSTED DOWN TO 1.25 INCH DIAMETER |
| | FB HANGERS AT EVEN-PANELS | (4) - 1" DIA. | -9.19 | -26.38 | -67.01 | ----- | 1.000 | 2.192 | 43.84 | |
| BEARINGS | TRUSS BEARING | BRG | 38.12 | 51.56 | 138.00 | 103.60 | 0.751 | 1.270 | 25.40 | PIN BEARING AT RUSTED PLATES |
| | ARCH BEARING | BRG | 119.23 | 27.14 | 192.00 | ----- | 1.000 | 2.681 | 53.63 | ELASTOMER COMPRESSION |

**NOTE A: FOR ARCH MEMBER LOAD RATING, SEE CALCULATIONS FOR COMBINED AXIAL PLUS MOMENT.**
**FLOOR BEAM OPERATING RATING = HS 41.56**
**ALL RATINGS BASED ON RIGHT (UPSTREAM, EAST) TRUSS, UNLESS NOTED OTHERWISE**

**GOVERNING OPERATING RATING = HS 14.13 FOR DETERIORATED BOTTOM CHORD SPLICE AT RIGHT TRUSS, JOINT L11**

**HS OPERATING RATING**

**STUYVESANT FALLS BRIDGE** **RB 4487-1**
**RIGHT (UPSTREAM, EAST) TRUSS** **NW**
**MEMBER LOADS FROM RISA ANALYSIS**
**H 20 LIVE LOAD, (FOR USE TO DETERMINE LOAD POSTING)**
**NOTE: POS = COMPRESSION, NEG = TENSION**

| | MEMBER KIM - RB | MEMBER DESCRIPTION | DEAD LOAD + POST-TENSION KIPS | DEAD + LIVE + PT + H 20 TRUCK (NO IMPACT) KIPS | DEAD + LIVE + PT + LANE LOAD 18 KIP (NO IMPACT) KIPS | DEAD + LIVE + PT + LANE LOAD 26 KIP (NO IMPACT) KIPS | IMPACT FACTOR | LIVE LOAD + IMPACT H 20 KIPS |
|---|---|---|---|---|---|---|---|---|
| TOP CHORD, END POSTS | K1-L0-U1 | (2) C12 X 20.7 + PLATE 1/4 X 16 | **46.45** | 73.04 | 95.46 | ----- | 1.153 | **56.51** |
| | K2-U1-U2 | | **43.22** | 70.56 | 94.41 | ----- | 1.153 | **59.02** |
| | K3-U2-U3 | | **43.22** | 70.56 | 94.41 | ----- | 1.153 | **59.02** |
| | K4-U3-U4 | | **52.74** | 86.10 | 115.49 | ----- | 1.153 | **72.35** |
| | K5-U4-U5 | | **52.74** | 86.10 | 115.49 | ----- | 1.153 | **72.35** |
| | K6-U5-U6 | | **54.99** | 88.34 | 120.30 | ----- | 1.153 | **75.30** |
| | K7-U6-U7 | | **54.99** | 88.34 | 120.30 | ----- | 1.153 | **75.30** |
| | K8-U7-U8 | | **52.70** | 86.07 | 115.46 | ----- | 1.153 | **72.36** |
| | K9-U8-U9 | | **52.70** | 86.07 | 115.46 | ----- | 1.153 | **72.36** |
| | K10-U9-U10 | | **43.20** | 70.54 | 94.40 | ----- | 1.153 | **59.04** |
| | K11-U10-U11 | | **43.20** | 70.54 | 94.40 | ----- | 1.153 | **59.04** |
| | K12-U11-L12 | | **46.01** | 72.60 | 95.01 | ----- | 1.153 | **56.49** |

| | MEMBER KIM - RB | MEMBER DESCRIPTION | DEAD LOAD + POST-TENSION KIPS | DEAD + LIVE + PT + H 20 TRUCK (NO IMPACT) KIPS | DEAD + LIVE + PT + LANE LOAD 18 KIP (NO IMPACT) KIPS | DEAD + LIVE + PT + LANE LOAD 26 KIP (NO IMPACT) KIPS | IMPACT FACTOR | LIVE LOAD + IMPACT H 20 KIPS |
|---|---|---|---|---|---|---|---|---|
| VERTICALS, TYPE 01 | K13-U1-A1 | (2) C6x8.2 | **-12.89** | -32.77 | -30.93 | -35.54 | 1.300 | **-29.45** |
| | K14-U11-A11 | | **-12.37** | -32.25 | -30.39 | -34.99 | 1.300 | **-29.41** |
| | K15-A1-L1 | | **-10.71** | -30.65 | -25.34 | -30.33 | 1.300 | **-25.92** |
| | K16-A11-L11 | | **-10.71** | -30.65 | -25.34 | -30.33 | 1.300 | **-25.92** |
| VERTICALS, TYPE 02 | K17-U2-A2 | (4) L 2 1/2 X 2 X 1/4 | **1.62** | 1.62 | 1.62 | 1.62 | 1.300 | **0.00** |
| | K18-U10-A10 | | **1.62** | 1.62 | 1.62 | 1.62 | 1.300 | **0.00** |
| | K19-A2-M2 | | **-8.67** | -11.98<br>2.16 | -11.51 | -12.51 | 1.300<br>1.300 | **-5.00**<br>**14.07** |
| | K20-A10-M10 | | **-8.54** | -11.85<br>2.29 | -11.36 | -12.51 | 1.300<br>1.300 | **-5.16**<br>**14.08** |
| VERTICALS, TYPE 01 | K21-U3-A3 | (2) C6x8.2 | **4.18** | 11.95<br>-7.64 | 10.81 | 12.29<br>-1.85 | 1.300<br>1.300 | **10.55**<br>**-15.36** |
| | K22-U9-A9 | | **4.30** | 12.09<br>-7.50 | 10.96 | 12.44<br>-1.70 | 1.300<br>1.300 | **10.58**<br>**-15.34** |
| | K23-A3-M3 | | **-2.04** | -13.42<br>7.05 | -1.88<br>9.15 | -4.90<br>11.02 | 1.300<br>1.300 | **-14.79**<br>**16.98** |
| | K24-A9-M9 | | **-1.92** | -13.30<br>7.16 | -1.76<br>9.28 | -4.78<br>11.14 | 1.300<br>1.300 | **-14.79**<br>**16.99** |
| | K25-M3-L3 | | **-1.50** | -12.88<br>7.59 | -1.34<br>9.69 | -4.36<br>11.56 | 1.300<br>1.300 | **-14.79**<br>**16.98** |
| | K26-M9-L9 | | **-1.38** | -12.76<br>7.70 | -1.22<br>9.82 | -4.24<br>11.68 | 1.300<br>1.300 | **-14.79**<br>**16.99** |
| VERTICALS, TYPE 02 | K27-U4-A4 | (4) L 2 1/2 X 2 X 1/4 | **1.58** | 1.58 | 1.58 | 1.58 | 1.300 | **0.00** |
| | K28-U8-A8 | | **1.58** | 1.58 | 1.58 | 1.58 | 1.300 | **0.00** |
| | K29-A4-M4 | | **-7.61** | -10.69<br>5.04 | -9.56 | -10.25<br>0.78 | 1.300<br>1.300 | **-4.00**<br>**16.45** |
| | K30-A8-M8 | | **-7.66** | -10.70<br>4.98 | -9.58 | -10.27<br>0.76 | 1.300<br>1.300 | **-3.96**<br>**16.43** |
| | K31-U5-A5 | | **4.09** | 14.98 | 11.20 | 13.49 | 1.300 | **14.16** |

**MEMBER LOADS WITH H20 LIVE LOAD**

| | MEMBER KIM - RB | MEMBER DESCRIPTION | DEAD LOAD + POST-TENSION KIPS | DEAD + LIVE + PT + H 20 TRUCK (NO IMPACT) KIPS | DEAD + LIVE + PT + LANE LOAD 18 KIP (NO IMPACT) KIPS | DEAD + LIVE + PT + LANE LOAD 26 KIP (NO IMPACT) KIPS | IMPACT FACTOR | LIVE LOAD + IMPACT H 20 KIPS |
|---|---|---|---|---|---|---|---|---|
| VERTICALS, TYPE 01 | | (2) C6x8.2 | | | | | | |
| | K32-U7-A7 | | **4.13** | 15.02 | 11.25 | 13.54 | 1.300 | **14.17** |
| | K33-A5-M5 | | **-2.89** | -5.68<br>11.06 | -0.74<br>8.72 | -1.32<br>11.96 | 1.300<br>1.300 | **-3.62**<br>**19.31** |
| | K34-A7-M7 | | **-2.81** | -5.66<br>11.09 | -0.72<br>8.75 | -1.29<br>11.99 | 1.300<br>1.300 | **-3.70**<br>**19.25** |
| | K35-M5-L5 | | **-2.19** | -4.98<br>11.76 | -0.04<br>9.42 | -0.62<br>12.66 | 1.300<br>1.300 | **-3.62**<br>**19.31** |
| | K36-M7-L7 | | **-2.11** | -4.96<br>11.79 | -0.02<br>9.45 | -0.59<br>12.69 | 1.300<br>1.300 | **-3.70**<br>**19.25** |
| VERTICALS, TYPE 02 | K37-U6-A6 | (4) L 2 1/2 X 2 X 1/4 | **1.58** | 1.58 | 1.58 | 1.58 | 1.300 | **0.00** |
| | K38-A6-M6 | | **-7.40** | -9.02<br>3.61 | -8.45 | -8.79<br>0.88 | 1.300<br>1.300 | **-2.11**<br>**14.31** |
| | K39-A0-A0.5 | | **237.23** | 245.90 | 260.23 | ----- | 1.153 | **26.52** |
| | K40-A0.5-A1 | | **229.23** | 237.90 | 249.66 | ----- | 1.153 | **23.56** |
| | K41-A1-A1.5 | | **229.46** | 238.08 | 251.82 | ----- | 1.153 | **25.79** |
| | K42-A1.5-A2 | | **224.51** | 233.14 | 245.38 | ----- | 1.153 | **24.05** |
| | K43-A2-A2.5 | | **219.94** | 228.13 | 240.53 | ----- | 1.153 | **23.74** |
| | K44-A2.5-A3 | | **215.94** | 224.13 | 235.20 | ----- | 1.153 | **22.21** |
| | K45-A3-A3.5 | | **213.64** | 222.22 | 234.50 | ----- | 1.153 | **24.05** |
| | K46-A3.5-AS1 | | **210.78** | 218.98 | 230.44 | ----- | 1.153 | **22.67** |
| | K47-AS1-A4 | | **210.62** | 218.81 | 230.28 | ----- | 1.153 | **22.67** |
| | K48-A4-A4.5 | | **208.51** | 217.11 | 228.46 | ----- | 1.153 | **23.00** |
| | K49-A4.5-A5 | | **206.71** | 214.55 | 225.68 | ----- | 1.153 | **21.87** |

**MEMBER LOADS WITH H20 LIVE LOAD**

| | MEMBER KIM - RB | MEMBER DESCRIPTION | DEAD LOAD + POST-TENSION KIPS | DEAD + LIVE + PT + H 20 TRUCK (NO IMPACT) KIPS | DEAD + LIVE + PT + LANE LOAD 18 KIP (NO IMPACT) KIPS | DEAD + LIVE + PT + LANE LOAD 26 KIP (NO IMPACT) KIPS | IMPACT FACTOR | LIVE LOAD + IMPACT H 20 KIPS |
|---|---|---|---|---|---|---|---|---|
| ARCH | K50-A5-A5.5 | (2) MC18 x 58 | **205.83** | 214.03 | 225.30 | ----- | 1.153 | **22.45** |
| | K51-A5.5-A6 | | **205.22** | 212.94 | 224.29 | ----- | 1.153 | **21.98** |
| | K52-A6-A6.5 | | **205.23** | 212.94 | 224.29 | ----- | 1.153 | **21.98** |
| | K53-A6.5-A7 | | **205.83** | 214.03 | 225.30 | ----- | 1.153 | **22.44** |
| | K54-A7-A7.5 | | **206.70** | 214.54 | 225.68 | ----- | 1.153 | **21.88** |
| | K55-A7.5-A8 | | **208.51** | 217.10 | 228.46 | ----- | 1.153 | **23.01** |
| | K56-A8-AS2 | | **210.62** | 218.81 | 230.28 | ----- | 1.153 | **22.66** |
| | K57-AS2-A8.5 | | **210.79** | 218.98 | 230.44 | ----- | 1.153 | **22.66** |
| | K58-A8.5-A9 | | **213.65** | 222.24 | 234.50 | ----- | 1.153 | **24.05** |
| | K59-A9-A9.5 | | **215.95** | 224.14 | 235.21 | ----- | 1.153 | **22.21** |
| | K60-A9.5-A10 | | **219.95** | 228.13 | 240.53 | ----- | 1.153 | **23.74** |
| | K61-A10-A10.5 | | **224.47** | 233.09 | 245.32 | ----- | 1.153 | **24.05** |
| | K62-A10.5-A11 | | **229.41** | 238.04 | 251.77 | ----- | 1.153 | **25.78** |
| | K63-A11-A11.5 | | **229.42** | 238.10 | 249.86 | ----- | 1.153 | **23.56** |
| | K64-A11.5-A12 | | **234.95** | 243.62 | 257.00 | ----- | 1.153 | **25.43** |

**MEMBER LOADS WITH H20 LIVE LOAD**

| | MEMBER KIM - RB | MEMBER DESCRIPTION | DEAD LOAD + POST-TENSION KIPS | DEAD + LIVE + PT + H 20 TRUCK (NO IMPACT) KIPS | DEAD + LIVE + PT + LANE LOAD 18 KIP (NO IMPACT) KIPS | DEAD + LIVE + PT + LANE LOAD 26 KIP (NO IMPACT) KIPS | IMPACT FACTOR | LIVE LOAD + IMPACT H 20 KIPS |
|---|---|---|---|---|---|---|---|---|
| HORIZONTAL, TYPE 01 | K65-M3-M4 | (2) C5 x 6.7 | **0.00** | 0.00 | 0.00 | 0.00 | 1.220 | **0.00** |
| | K66-M4-M5 | | **-3.82** | -9.89 | -13.88 | -15.08 | 1.220 | **-13.73** |
| | K67-M5-M6 | | **-3.82** | -9.89 | -13.88 | -15.08 | 1.220 | **-13.73** |
| | K68-M6-M7 | | **-3.78** | -9.90 | -13.88 | -15.08 | 1.220 | **-13.79** |
| | K69-M7-M8 | | **-3.78** | -9.90 | -13.88 | -15.08 | 1.220 | **-13.79** |
| | K70-M8-M9 | | **0.00** | 0.00 | 0.00 | 0.00 | 1.220 | **0.00** |
| VERTICALS, TYPE 03 | K71-M2-L2 | (2) BARS 1 - SQ + (2) PL 3/3 X 9 | **-10.62** | -30.21 | -25.06 | -29.95 | 1.300 | **-25.47** |
| | K72-M10-L10 | | **-10.62** | -30.21 | -25.06 | -29.95 | 1.300 | **-25.47** |
| | K73-M4-L4 | | **-10.27** | -30.12 | -24.69 | -29.65 | 1.300 | **-25.81** |
| | K74-M8-L8 | | **-10.27** | -30.12 | -24.69 | -29.65 | 1.300 | **-25.81** |
| | K75-M6-L6 | | **-10.82** | -30.81 | -25.48 | -30.48 | 1.300 | **-25.99** |
| DIAGONAL, TYPE 01 | K76-U1-M2 | (2) BARS 1 X 3 | **-18.48** | -35.80 | -46.38 | -49.96 | 1.160 | **-36.51** |
| | K77-U11-M10 | | **-18.76** | -36.08 | -46.69 | -50.26 | 1.160 | **-36.54** |
| DIAGONAL, TYPE 02 | K78-M2-L3 | (2) BARS 7/8 X 3 | **-16.81** | -32.90 | -42.33 | -45.59 | 1.170 | **-33.67** |
| | K79-M10-L9 | | **-17.01** | -33.10 | -42.54 | -45.80 | 1.170 | **-33.68** |
| DIAGONAL, TYPE 03 | K80-U3-M2 | 1 3/4-IN DIA ROD 1992 | **-2.10** | -15.54 | -11.34 | -14.49 | 1.300 | **-17.47** |
| | K81-U9- M10 | | **-2.20** | -15.65 | -11.45 | -14.60 | 1.300 | **-17.48** |

**MEMBER LOADS WITH H20 LIVE LOAD**

| | MEMBER KIM - RB | MEMBER DESCRIPTION | DEAD LOAD + POST-TENSION KIPS | DEAD + LIVE + PT + H 20 TRUCK (NO IMPACT) KIPS | DEAD + LIVE + PT + LANE LOAD 18 KIP (NO IMPACT) KIPS | DEAD + LIVE + PT + LANE LOAD 26 KIP (NO IMPACT) KIPS | IMPACT FACTOR | LIVE LOAD + IMPACT H 20 KIPS |
|---|---|---|---|---|---|---|---|---|
| DIAGONAL, TYPE 02 | K82-U3-M4 | (2) BARS 7/8 X 3 | **-17.78** | -37.18 | -43.97 | -47.65 | 1.180 | **-35.26** |
| | K83-U9-M8 | | **-17.83** | -37.25 | -44.05 | -47.73 | 1.180 | **-35.28** |
| DIAGONAL, TYPE 04 | K84-M4-L5 | (2) BARS 3/4 X 3 | **-12.35** | -29.66 | -32.12 | -35.54 | 1.190 | **-27.60** |
| | K85-M8-L7 | | **-12.46** | -29.75 | -32.21 | -35.63 | 1.190 | **-27.57** |
| DIAGONAL, TYPE 03 | K86-U5-M4 | 1 3/4-IN DIA ROD 1992 | **0.00** | -8.50 | -1.73 | -3.80 | 1.300 | **-11.05** |
| | K87-U7-M8 | | **0.00** | -8.48 | -1.72 | -3.78 | 1.300 | **-11.02** |
| DIAGONAL, TYPE 05 | K88-U5-M6 | (2) BARS 1 1/4 SQ | **-3.19** | -18.53 | -13.21 | -16.43 | 1.210 | **-18.56** |
| | K89-U7-M6 | | **-3.25** | -18.59 | -13.27 | -16.50 | 1.210 | **-18.56** |
| DIAGONAL, TYPE 06 | K90-M6-L5 | 1 3/4-IN DIA ROD 1992 | **0.00** | -11.12 | -4.73 | -7.13 | 1.220 | **-13.57** |
| | K91-M6-L7 | | **0.00** | -11.05 | -4.68 | -7.08 | 1.220 | **-13.48** |
| BOTTOM CHORD, TYPE 01 | K92-L0-L1 | (2) C9 x 13.4 | **-26.54** | -41.73 | -54.54 | ----- | 1.153 | **-32.29** |
| | K93-L11-L12 | | **-26.29** | -41.48 | -54.29 | ----- | 1.153 | **-32.28** |
| | K94-L1-L2 | | **-26.54** | -41.73 | -54.54 | ----- | 1.153 | **-32.29** |
| | K95-L10-L11 | | **-26.29** | -41.48 | -54.29 | ----- | 1.153 | **-32.28** |
| | K96-L2-L3 | | **-26.54** | -41.73 | -54.54 | ----- | 1.153 | **-32.29** |
| | K97-L9-L10 | | **-26.29** | -41.48 | -54.29 | ----- | 1.153 | **-32.28** |

**MEMBER LOADS WITH H20 LIVE LOAD**

| | MEMBER KIM - RB | MEMBER DESCRIPTION | DEAD LOAD + POST-TENSION KIPS | DEAD + LIVE + PT + H 20 TRUCK (NO IMPACT) KIPS | DEAD + LIVE + PT + LANE LOAD 18 KIP (NO IMPACT) KIPS | DEAD + LIVE + PT + LANE LOAD 26 KIP (NO IMPACT) KIPS | IMPACT FACTOR | LIVE LOAD + IMPACT H 20 KIPS |
|---|---|---|---|---|---|---|---|---|
| BOTTOM CHORD, TYPE 02 | K98-L3-L4 | (2) BARS 1 X 5 | **-40.23** | -64.49 | -87.08 | ----- | 1.153 | **-54.02** |
| | K99-L8-L9 | | **-40.15** | -64.41 | -87.00 | ----- | 1.153 | **-54.02** |
| | K100-L4-L5 | | **-40.23** | -64.49 | -87.08 | ----- | 1.153 | **-54.02** |
| | K101-L7-L8 | | **-40.15** | -64.41 | -87.00 | ----- | 1.153 | **-54.02** |
| BOTTOM CHORD, TYPE 03 | K102-L5-L6 | (2) BARS 1 3/16 X 5 | **-48.92** | -74.49 | -104.42 | ----- | 1.153 | **-64.00** |
| | K103-L6-L7 | | **-48.92** | -74.49 | -104.42 | ----- | 1.153 | **-64.00** |
| **PT RODS** | K104-PT ROD | **1 3/8" DIA.** | **-102.61** | -106.46 | -112.15 | ----- | 1.153 | **-10.99** |
| FLOORBEAM HANGERS | FB HANGERS AT HALF-PANELS | **(2) - 1 1/2" DIA.** | **-9.19** | -29.48 | -24.02 | -29.09 | 1.300 | **-26.38** |
| | FB HANGERS AT ODD-PANELS | **(2) - 1 1/2" DIA.** | **-9.62** | -29.91 | -24.45 | -29.52 | 1.300 | **-26.38** |
| | FB HANGERS AT EVEN-PANELS | **(4) - 1" DIA.** | **-9.19** | -29.48 | -24.02 | -29.09 | 1.300 | **-26.38** |
| BEARINGS | TRUSS BEARING | **BRG** | **38.12** | 59.94 | ----- | 82.84 | 1.153 | **51.56** |
| | ARCH BEARING | **BRG** | **119.23** | 135.62 | ----- | 142.77 | 1.153 | **27.14** |

**MEMBER LOADS WITH H20 LIVE LOAD**

**STUYVESANT FALLS BRIDGE** **RB 4487-1**
**NW**

**H OPERATING RATING AND LOAD POSTING**

**NOTE: POS = COMPRESSION, NEG = TENSION**

| | MEMBER KIM - RB | MEMBER DESCRIPTION | MEMBER EFFECTIVE SPAN LENGTH FEET | DEAD LOAD + POST-TENSION KIPS | LIVE LOAD + IMPACT H 20 KIPS | MEMBER OR CONNECTION OPERATING CAPACITY KIPS | H OPERATING RATING | FACTOR FOR SAFE LOAD CAPACITY REFERENCE EI 05-034 TABLE 2 | SAFE LOAD CAPACTIY SLC -H | H EQUIVALENT OF LEGAL LOAD REFERENCE EI 05-034 TABLE 1 | RATIO OF SLC-H TO H EQUIV. LEGAL LOAD (POSTING REQ'D IF < 1) |
|---|---|---|---|---|---|---|---|---|---|---|---|
| TOP CHORD, END POSTS | K1-L0-U1 | (2) C12 X 20.7 + PLATE 1/4 X 16 | 202.25 | 46.45 | 56.51 | 159.00 | 39.83 | 0.80 | 31.9 | 20.0 | 1.6 |
| | K2-U1-U2 | | 202.25 | 43.22 | 59.02 | 159.00 | 39.23 | 0.80 | 31.4 | 20.0 | 1.6 |
| | K3-U2-U3 | | 202.25 | 43.22 | 59.02 | 143.10 | 33.84 | 0.80 | 27.1 | 20.0 | 1.4 |
| | K4-U3-U4 | | 202.25 | 52.74 | 72.35 | 174.90 | 33.77 | 0.80 | 27.0 | 20.0 | 1.4 |
| | K5-U4-U5 | | 202.25 | 52.74 | 72.35 | 174.90 | 33.77 | 0.80 | 27.0 | 20.0 | 1.4 |
| | K6-U5-U6 | | 202.25 | 54.99 | 75.30 | 174.90 | 31.85 | 0.80 | 25.5 | 20.0 | 1.3 |
| | K7-U6-U7 | | 202.25 | 54.99 | 75.30 | 174.90 | 31.85 | 0.80 | 25.5 | 20.0 | 1.3 |
| | K8-U7-U8 | | 202.25 | 52.70 | 72.36 | 174.90 | 33.78 | 0.80 | 27.0 | 20.0 | 1.4 |
| | K9-U8-U9 | | 202.25 | 52.70 | 72.36 | 174.90 | 33.78 | 0.80 | 27.0 | 20.0 | 1.4 |
| | K10-U9-U10 | | 202.25 | 43.20 | 59.04 | 127.20 | 28.46 | 0.80 | 22.8 | 20.0 | 1.1 |
| | K11-U10-U11 | | 202.25 | 43.20 | 59.04 | 159.00 | 39.23 | 0.80 | 31.4 | 20.0 | 1.6 |
| | K12-U11-L12 | | 202.25 | 46.01 | 56.49 | 159.00 | 40.00 | 0.80 | 32.0 | 20.0 | 1.6 |
| VERTICALS, TYPE 01 | K13-U1-A1 | (2) C6x8.2 | 33.70 | -12.89 | -29.45 | -71.50 | 39.81 | 0.70 | 27.9 | 22.0 | 1.3 |
| | K14-U11-A11 | | 33.70 | -12.37 | -29.41 | -71.50 | 40.21 | 0.70 | 28.1 | 22.0 | 1.3 |
| | K15-A1-L1 | | 33.70 | -10.71 | -25.92 | -75.81 | 50.23 | 0.80 | 40.2 | 22.0 | 1.8 |
| | K16-A11-L11 | | 33.70 | -10.71 | -25.92 | -75.81 | 50.23 | 0.80 | 40.2 | 22.0 | 1.8 |

| | MEMBER KIM - RB | MEMBER DESCRIPTION | MEMBER EFFECTIVE SPAN LENGTH FEET | DEAD LOAD + POST-TENSION KIPS | LIVE LOAD + IMPACT H 20 KIPS | MEMBER OR CONNECTION OPERATING CAPACITY KIPS | H OPERATING RATING | FACTOR FOR SAFE LOAD CAPACITY REFERENCE EI 05-034 TABLE 2 | SAFE LOAD CAPACTIY SLC -H | H EQUIVALENT OF LEGAL LOAD REFERENCE EI 05-034 TABLE 1 | RATIO OF SLC-H TO H EQUIV. LEGAL LOAD (POSTING REQ'D IF < 1) |
|---|---|---|---|---|---|---|---|---|---|---|---|
| VERTICALS, TYPE 02 | K17-U2-A2 | (4) L 2 1/2 X 2 X 1/4 | 33.70 | 1.62 | 0.00 | 40.48 | ----- | ----- | ----- | ----- | ----- |
| | K18-U10-A10 | | 33.70 | 1.62 | 0.00 | 40.48 | ----- | ----- | ----- | ----- | ----- |
| | K19-A2-M2 | | 33.70 | -8.67 | -5.00 | -21.20 | 50.18 | 0.70 | 35.1 | 22.0 | 1.6 |
| | | | | | 14.07 | 51.65 | 85.72 | 0.70 | 60.0 | 22.0 | 2.7 |
| | K20-A10-M10 | | 33.70 | -8.54 | -5.16 | -43.90 | 137.10 | 0.70 | 96.0 | 22.0 | 4.4 |
| | | | | | 14.08 | 51.65 | 85.50 | 0.70 | 59.9 | 22.0 | 2.7 |
| VERTICALS, TYPE 01 | K21-U3-A3 | (2) C6x8.2 | 50.55 | 4.18 | 10.55 | 55.62 | 97.52 | 0.70 | 68.3 | 24.0 | 2.8 |
| | | | | | -15.36 | -39.50 | 56.87 | 0.70 | 39.8 | 24.0 | 1.7 |
| | K22-U9-A9 | | 50.55 | 4.30 | 10.58 | 55.62 | 97.01 | 0.70 | 67.9 | 24.0 | 2.8 |
| | | | | | -15.34 | -39.50 | 57.11 | 0.70 | 40.0 | 24.0 | 1.7 |
| | K23-A3-M3 | | 50.55 | -2.04 | -14.79 | -75.81 | 99.75 | 0.80 | 79.8 | 24.0 | 3.3 |
| | | | | | 16.98 | 57.91 | 70.62 | 0.80 | 56.5 | 24.0 | 2.4 |
| | K24-A9-M9 | | 50.55 | -1.92 | -14.79 | -75.81 | 99.92 | 0.80 | 79.9 | 24.0 | 3.3 |
| | | | | | 16.99 | 57.91 | 70.45 | 0.80 | 56.4 | 24.0 | 2.3 |
| | K25-M3-L3 | | 50.55 | -1.50 | -14.79 | -75.81 | 100.48 | 0.80 | 80.4 | 24.0 | 3.3 |
| | | | | | 16.98 | 49.13 | 59.64 | 0.80 | 47.7 | 24.0 | 2.0 |
| | K26-M9-L9 | | 50.55 | -1.38 | -14.79 | -75.81 | 100.65 | 0.80 | 80.5 | 24.0 | 3.4 |
| | | | | | 16.99 | 49.13 | 59.48 | 0.80 | 47.6 | 24.0 | 2.0 |
| VERTICALS, TYPE 02 | K27-U4-A4 | (4) L 2 1/2 X 2 X 1/4 | 33.70 | 1.58 | 0.00 | 51.04 | ----- | ----- | ----- | ----- | ----- |
| | K28-U8-A8 | | 33.70 | 1.58 | 0.00 | 51.04 | ----- | ----- | ----- | ----- | ----- |
| | K29-A4-M4 | | 33.70 | -7.61 | -4.00 | -70.02 | 312.12 | 0.70 | 218.5 | 22.0 | 9.9 |
| | | | | | 16.45 | 41.94 | 60.25 | 0.70 | 42.2 | 22.0 | 1.9 |
| | K30-A8-M8 | | 33.70 | -7.66 | -3.96 | -70.02 | 315.09 | 0.70 | 220.6 | 22.0 | 10.0 |
| | | | | | 16.43 | 17.30 | 30.39 | 0.70 | **21.3** | **22.0** | **1.0** |
| VERTICALS, TYPE 01 | K31-U5-A5 | (2) C6x8.2 | 84.25 | 4.09 | 14.16 | 59.07 | 77.66 | 0.70 | 54.4 | 24.0 | 2.3 |
| | K32-U7-A7 | | 84.25 | 4.13 | 14.17 | 59.07 | 77.57 | 0.70 | 54.3 | 24.0 | 2.3 |
| | K33-A5-M5 | | 84.25 | -2.89 | -3.62 | -75.81 | 402.51 | 0.80 | 322.0 | 24.0 | 13.4 |
| | | | | | 19.31 | 52.84 | 57.72 | 0.80 | 46.2 | 24.0 | 1.9 |
| | K34-A7-M7 | | 84.25 | -2.81 | -3.70 | -75.81 | 394.33 | 0.80 | 315.5 | 24.0 | 13.1 |
| | | | | | 19.25 | 52.84 | 57.83 | 0.80 | 46.3 | 24.0 | 1.9 |
| | K35-M5-L5 | | 84.25 | -2.19 | -3.62 | -75.81 | 406.38 | 0.80 | 325.1 | 24.0 | 13.5 |
| | | | | | 19.31 | 49.13 | 53.15 | 0.80 | 42.5 | 24.0 | 1.8 |
| | K36-M7-L7 | | 84.25 | -2.11 | -3.70 | -75.81 | 398.11 | 0.80 | 318.5 | 24.0 | 13.3 |
| | | | | | 19.25 | 49.13 | 53.25 | 0.80 | 42.6 | 24.0 | 1.8 |

**H OPERATING RATING AND LOAD POSTING**

| | MEMBER KIM - RB | MEMBER DESCRIPTION | MEMBER EFFECTIVE SPAN LENGTH FEET | DEAD LOAD + POST-TENSION KIPS | LIVE LOAD + IMPACT H 20 KIPS | MEMBER OR CONNECTION OPERATING CAPACITY KIPS | H OPERATING RATING | FACTOR FOR SAFE LOAD CAPACITY REFERENCE EI 05-034 TABLE 2 | SAFE LOAD CAPACTIY SLC -H | H EQUIVALENT OF LEGAL LOAD REFERENCE EI 05-034 TABLE 1 | RATIO OF SLC-H TO H EQUIV. LEGAL LOAD (POSTING REQ'D IF < 1) |
|---|---|---|---|---|---|---|---|---|---|---|---|
| VERTICALS, TYPE 02 | K37-U6-A6 | (4) L 2 1/2 X 2 X 1/4 | 33.70 | 1.58 | 0.00 | 54.22 | ----- | ----- | ----- | ----- | ----- |
| | K38-A6-M6 | | 33.70 | -7.40 | -2.11<br>14.31 | -70.02<br>32.38 | 593.97<br>55.59 | 0.80<br>0.80 | 475.2<br>44.5 | 22.0<br>22.0 | 21.6<br>2.0 |
| ARCH | K39-A0-A0.5 | (2) MC18 x 58 | 202.25 | 237.23 | 26.52 | **Note A** | 40.40 | 0.80 | 32.3 | 20.0 | 1.6 |
| | K64-A11.5-A12 | | 202.25 | 237.23 | 25.43 | **Note A** | 40.40 | 0.80 | 32.3 | 20.0 | 1.6 |
| HORIZONTAL, TYPE 01 | K65-M3-M4 | (2) C5 x 6.7 | 101.13 | 0.00 | 0.00 | 35.61 | ----- | ----- | ----- | ----- | ----- |
| | K66-M4-M5 | | 101.13 | -3.82 | -13.73 | -39.00 | 51.25 | 0.70 | 35.9 | 23.0 | 1.6 |
| | K67-M5-M6 | | 101.13 | -3.82 | -13.73 | -39.00 | 51.25 | 0.70 | 35.9 | 23.0 | 1.6 |
| | K68-M6-M7 | | 101.13 | -3.78 | -13.79 | -39.00 | 51.09 | 0.70 | 35.8 | 23.0 | 1.6 |
| | K69-M7-M8 | | 101.13 | -3.78 | -13.79 | -39.00 | 51.09 | 0.70 | 35.8 | 23.0 | 1.6 |
| | K70-M8-M9 | | 101.13 | 0.00 | 0.00 | 35.61 | ----- | ----- | ----- | ----- | ----- |
| VERTICALS, TYPE 03 | K71-M2-L2 | (2) BARS 1 - SQ + (2) PL 3/3 X 9 | 33.70 | -10.62 | -25.47 | -67.01 | 44.28 | 0.70 | 31.0 | 22.0 | 1.4 |
| | K72-M10-L10 | | 33.70 | -10.62 | -25.47 | -67.01 | 44.28 | 0.70 | 31.0 | 22.0 | 1.4 |
| | K73-M4-L4 | | 33.70 | -10.27 | -25.81 | -67.01 | 43.98 | 0.70 | 30.8 | 22.0 | 1.4 |
| | K74-M8-L8 | | 33.70 | -10.27 | -25.81 | -67.01 | 43.98 | 0.70 | 30.8 | 22.0 | 1.4 |
| | K75-M6-L6 | | 33.70 | -10.82 | -25.99 | -67.01 | 43.24 | 0.70 | 30.3 | 22.0 | 1.4 |
| DIAGONAL, TYPE 01 | K76-U1-M2 | (2) BARS 1 X 3 | 180.40 | -18.48 | -36.51 | -105.30 | 47.56 | 0.70 | 33.3 | 20.0 | 1.7 |
| | K77-U11-M10 | | 180.40 | -18.76 | -36.54 | -105.30 | 47.37 | 0.70 | 33.2 | 20.0 | 1.7 |
| DIAGONAL, TYPE 02 | K78-M2-L3 | (2) BARS 7/8 X 3 | 174.75 | -16.81 | -33.67 | -80.40 | 37.77 | 0.70 | 26.4 | 20.0 | 1.3 |
| | K79-M10-L9 | | 174.75 | -17.01 | -33.68 | -80.40 | 37.64 | 0.70 | 26.3 | 20.0 | 1.3 |

**H OPERATING RATING AND LOAD POSTING**

| | MEMBER KIM - RB | MEMBER DESCRIPTION | MEMBER EFFECTIVE SPAN LENGTH FEET | DEAD LOAD + POST-TENSION KIPS | LIVE LOAD + IMPACT H 20 KIPS | MEMBER OR CONNECTION OPERATING CAPACITY KIPS | H OPERATING RATING | FACTOR FOR SAFE LOAD CAPACITY REFERENCE EI 05-034 TABLE 2 | SAFE LOAD CAPACTIY SLC -H | H EQUIVALENT OF LEGAL LOAD REFERENCE EI 05-034 TABLE 1 | RATIO OF SLC-H TO H EQUIV. LEGAL LOAD (POSTING REQ'D IF < 1) |
|---|---|---|---|---|---|---|---|---|---|---|---|
| DIAGONAL, TYPE 03 | K80-U3-M2 | 1 3/4-IN DIA ROD 1992 | 33.70 | -2.10 | -17.47 | -51.31 | 56.34 | 0.70 | 39.4 | 22.0 | 1.8 |
| | K81-U9- M10 | | 33.70 | -2.20 | -17.48 | -51.31 | 56.18 | 0.70 | 39.3 | 22.0 | 1.8 |
| DIAGONAL, TYPE 02 | K82-U3-M4 | (2) BARS 7/8 X 3 | 147.10 | -17.78 | -35.26 | -92.04 | 42.13 | 0.70 | 29.5 | 20.0 | 1.5 |
| | K83-U9-M8 | | 147.10 | -17.83 | -35.28 | -92.04 | 42.06 | 0.70 | 29.4 | 20.0 | 1.5 |
| DIAGONAL, TYPE 04 | K84-M4-L5 | (2) BARS 3/4 X 3 | 141.55 | -12.35 | -27.60 | -73.10 | 44.03 | 0.70 | 30.8 | 20.0 | 1.5 |
| | K85-M8-L7 | | 141.55 | -12.46 | -27.57 | -73.10 | 43.99 | 0.70 | 30.8 | 20.0 | 1.5 |
| DIAGONAL, TYPE 03 | K86-U5-M4 | 1 3/4-IN DIA ROD 1992 | 33.70 | 0.00 | -11.05 | -51.31 | 92.87 | 0.70 | 65.0 | 22.0 | 3.0 |
| | K87-U7-M8 | | 33.70 | 0.00 | -11.02 | -51.31 | 93.09 | 0.70 | 65.2 | 22.0 | 3.0 |
| DIAGONAL, TYPE 05 | K88-U5-M6 | (2) BARS 1 1/4 SQ | 110.30 | -3.19 | -18.56 | -54.99 | 55.81 | 0.70 | 39.1 | 22.0 | 1.8 |
| | K89-U7-M6 | | 110.30 | -3.25 | -18.56 | -54.99 | 55.74 | 0.70 | 39.0 | 22.0 | 1.8 |
| DIAGONAL, TYPE 06 | K90-M6-L5 | 1 3/4-IN DIA ROD 1992 | 101.13 | 0.00 | -13.57 | -51.31 | 75.64 | 0.70 | 52.9 | 23.0 | 2.3 |
| | K91-M6-L7 | | 101.13 | 0.00 | -13.48 | -51.31 | 76.12 | 0.70 | 53.3 | 23.0 | 2.3 |
| BOTTOM CHORD, TYPE 01 | K92-L0-L1 | (2) C9 x 13.4 | 202.25 | -26.54 | -32.29 | -89.80 | 39.18 | 0.70 | 27.4 | 20.0 | 1.4 |
| | K93-L11-L12 | | 202.25 | -26.29 | -32.28 | -49.10 | **14.13** | 0.70 | **9.9** | **20.0** | **0.5** |
| | K94-L1-L2 | | 202.25 | -26.54 | -32.29 | -89.80 | 39.18 | 0.70 | 27.4 | 20.0 | 1.4 |
| | K95-L10-L11 | | 202.25 | -26.29 | -32.28 | -49.10 | **14.13** | 0.70 | **9.9** | **20.0** | **0.5** |
| | K96-L2-L3 | | 202.25 | -26.54 | -32.29 | -80.10 | 33.18 | 0.70 | 23.2 | 20.0 | 1.2 |
| | K97-L9-L10 | | 202.25 | -26.29 | -32.28 | -60.10 | **20.95** | 0.70 | **14.7** | **20.0** | **0.7** |

**H OPERATING RATING AND LOAD POSTING**

| | MEMBER KIM - RB | MEMBER DESCRIPTION | MEMBER EFFECTIVE SPAN LENGTH FEET | DEAD LOAD + POST-TENSION KIPS | LIVE LOAD + IMPACT H 20 KIPS | MEMBER OR CONNECTION OPERATING CAPACITY KIPS | H OPERATING RATING | FACTOR FOR SAFE LOAD CAPACITY REFERENCE EI 05-034 TABLE 2 | SAFE LOAD CAPACTIY SLC -H | H EQUIVALENT OF LEGAL LOAD REFERENCE EI 05-034 TABLE 1 | RATIO OF SLC-H TO H EQUIV. LEGAL LOAD (POSTING REQ'D IF < 1) |
|---|---|---|---|---|---|---|---|---|---|---|---|
| BOTTOM CHORD, TYPE 02 | K98-L3-L4 | (2) BARS 1 X 5 | 202.25 | -40.23 | -54.02 | -146.00 | 39.16 | 0.70 | 27.4 | 20.0 | 1.4 |
| | K99-L8-L9 | | 202.25 | -40.15 | -54.02 | -146.00 | 39.19 | 0.70 | 27.4 | 20.0 | 1.4 |
| | K100-L4-L5 | | 202.25 | -40.23 | -54.02 | -146.00 | 39.16 | 0.70 | 27.4 | 20.0 | 1.4 |
| | K101-L7-L8 | | 202.25 | -40.15 | -54.02 | -146.00 | 39.19 | 0.70 | 27.4 | 20.0 | 1.4 |
| BOTTOM CHORD, TYPE 03 | K102-L5-L6 | (2) BARS 1 3/16 X 5 | 202.25 | -48.92 | -64.00 | -183.00 | 41.90 | 0.70 | 29.3 | 20.0 | 1.5 |
| | K103-L6-L7 | | 202.25 | -48.92 | -64.00 | -183.00 | 41.90 | 0.70 | 29.3 | 20.0 | 1.5 |
| PT RODS | K104-PT ROD | 1 3/8" DIA. | 202.25 | -102.61 | -10.99 | -170.64 | 123.77 | 0.60 | 74.3 | 20.0 | 3.7 |
| FLOORBEAM HANGERS | FB HANGERS AT HALF-PANELS | (2) - 1 1/2" DIA. | 16.85 | -9.19 | -26.38 | -66.30 | 43.30 | 0.60 | 26.0 | 18.0 | 1.4 |
| | FB HANGERS AT ODD-PANELS | (2) - 1 1/2" DIA. | 16.85 | -9.62 | -26.38 | -66.30 | 42.98 | 0.60 | 25.8 | 18.0 | 1.4 |
| | FB HANGERS AT EVEN-PANELS | (4) - 1" DIA. | 16.85 | -9.19 | -26.38 | -67.01 | 43.84 | 0.60 | 26.3 | 18.0 | 1.5 |
| BEARINGS | TRUSS BEARING | BRG | 202.25 | 38.12 | 51.56 | 103.60 | 25.40 | 0.80 | **20.3** | **20.0** | **1.0** |
| | ARCH BEARING | BRG | 202.25 | 119.23 | 27.14 | 192.00 | 53.62 | 0.80 | 42.9 | 20.0 | 2.1 |

**NOTE A: FOR ARCH MEMBER LOAD RATING, SEE CALCULATIONS FOR COMBINED AXIAL PLUS MOMENT.**
**ALL RATINGS BASED ON RIGHT (UPSTREAM, EAST) TRUSS, UNLESS NOTED OTHERWISE**
**FACTORS USED TO DETERMINE SAFE LOAD CAPACITY, REF. NYSDOT EI 05-034, TABLE 2:**

1. **BUILT-UP RIVETED MEMBERS AND WITH RIVETED END CONNECTIONS = 0.8**
2. **MEMBERS WITH PINNED END CONNECTIONS AND PINNED EYEBARS = 0.7**
   **(USED 0.7 INSTEAD OF 0.6 BECAUSE THE ARCH PROVIDES A REDUNDANT LOAD PATH)**
3. **FLOORBEAM HANGERS AND PT RODS = 0.6**

**GOVERNING LOAD POSTING FOR RIGHT TRUSS, BOTTOM CHORD, JOINT L11 (MEMBERS L10-L11 AND L11-L12):**
**SLC-H = 9.9, APPROX. 10, AND IN ACCORDANCE WITH NYSDOT, EI 05-034, TABLE 3, WITH EFFECTIVE SPAN = 202.25 FEET:**

**LOAD POSTING VALUE = 12 TONS**

# Appendix D

## Alternatives Sketches

**SK1- Existing Conditions**
**SK2- New Truss Bridge (Alternate 5A)**
**SK3- New Arch Bridge (Alternate 5B or 5D)**
**SK4- New Multi-Girder Bridge (Alternate 5C)**
**SK5- New Multi-Girder Bridge w/ Exist.Trusses (Alternate 6)**

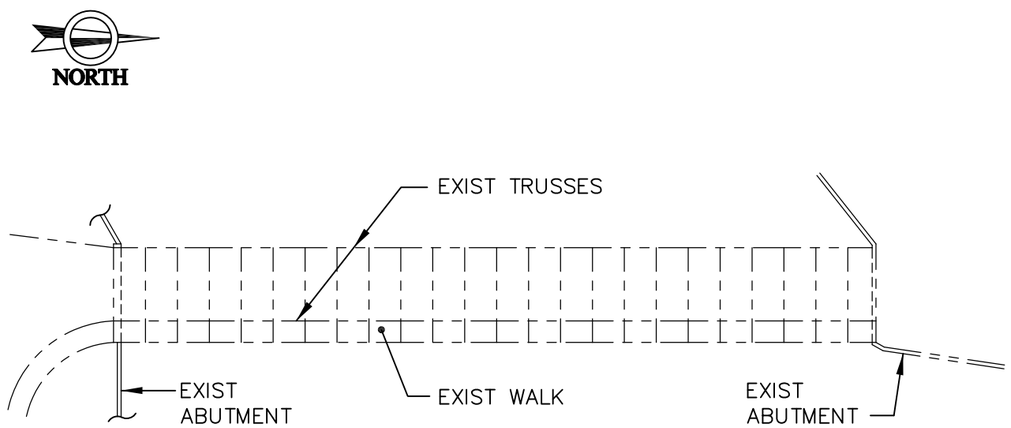


## PLAN

SCALE: 1" = 40'–0"

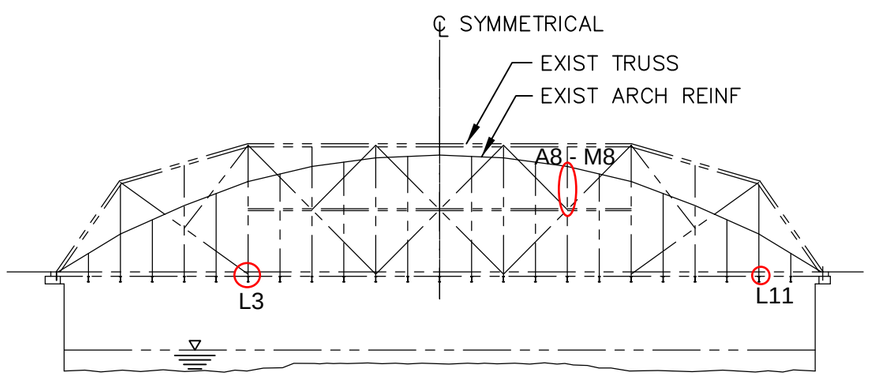


## ELEVATION (LOOKING WEST)

SCALE: 1" = 40'–0"

LIMITING EXISTING ELEMENTS AS NOTED

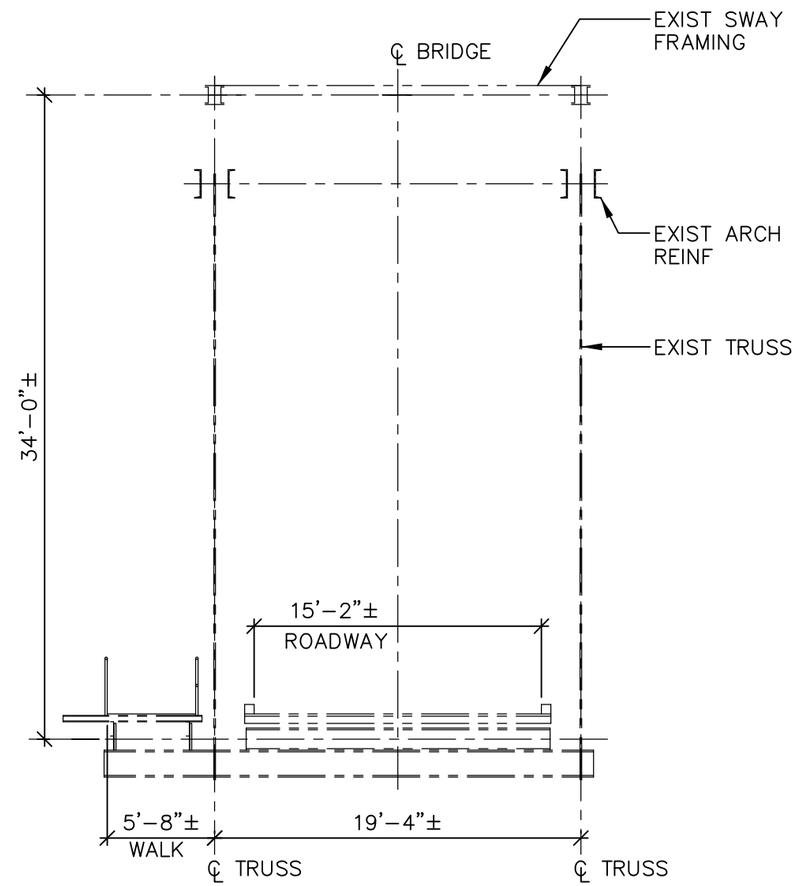


## TRANSVERSE SECTION

SCALE: 1/8" = 1'–0"

PROJECT: STUYVESANT FALLS BRIDGE OVER KINDERHOOK CREEK

SUBJECT: EXISTING CONDITION

DATE: July 19, 2013

DWG BY: GRG CHK BY: MGY

JOB NO.: 4487.1 PAGE: SK-1

© 2013 Ryan-Biggs Associates, P.C.

RYAN-BIGGS ASSOCIATES, P.C.
257 Ushers Road
Clifton Park, NY 12065
p 518 406.5506
f 518 406.5514
www.ryanbiggs.com

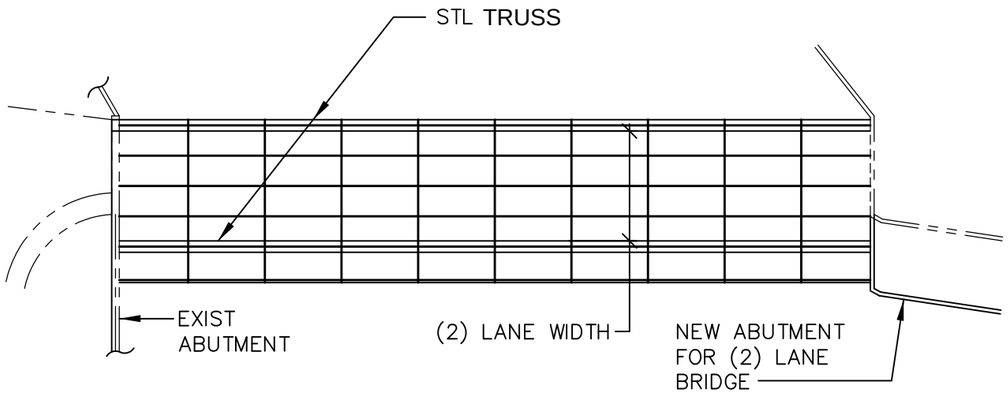


## PLAN

SCALE: 1" = 40'–0"

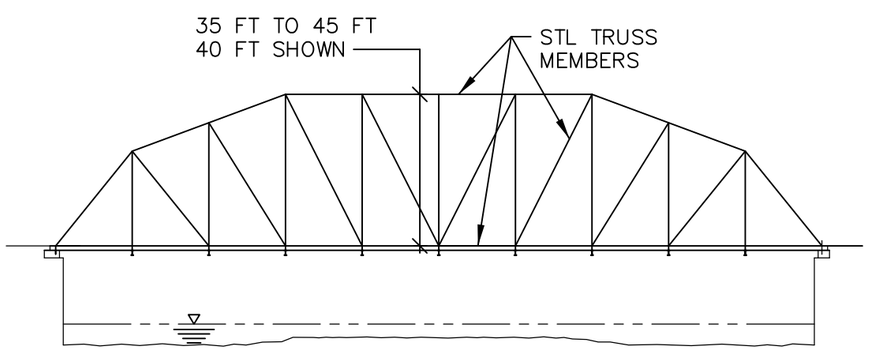


## ELEVATION (LOOKING WEST)

SCALE: 1" = 40'–0"

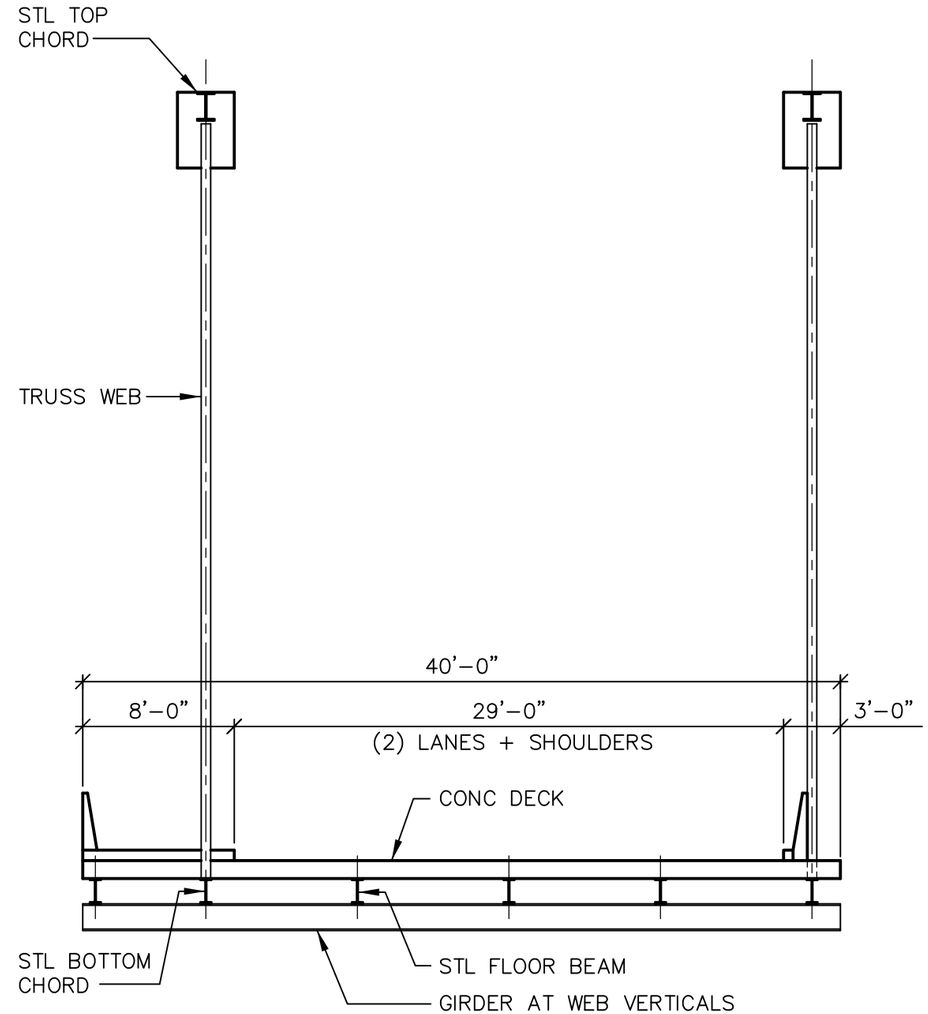


## TRANSVERSE SECTION

SCALE: 1/8" = 1'–0"

PROJECT: STUYVESANT FALLS BRIDGE
OVER KINDERHOOK CREEK

SUBJECT: NEW TRUSS BRIDGE
(ALTERNATE 5A)

DATE: July 19, 2013

DWG BY: GRG CHK BY: MGY

JOB NO.: 4487.1 PAGE: SK-2

© 2013 Ryan-Biggs Associates, P.C.

RYAN-BIGGS ASSOCIATES, P.C.
257 Ushers Road
Clifton Park, NY 12065
p 518 406.5506
f 518 406.5514
www.ryanbiggs.com

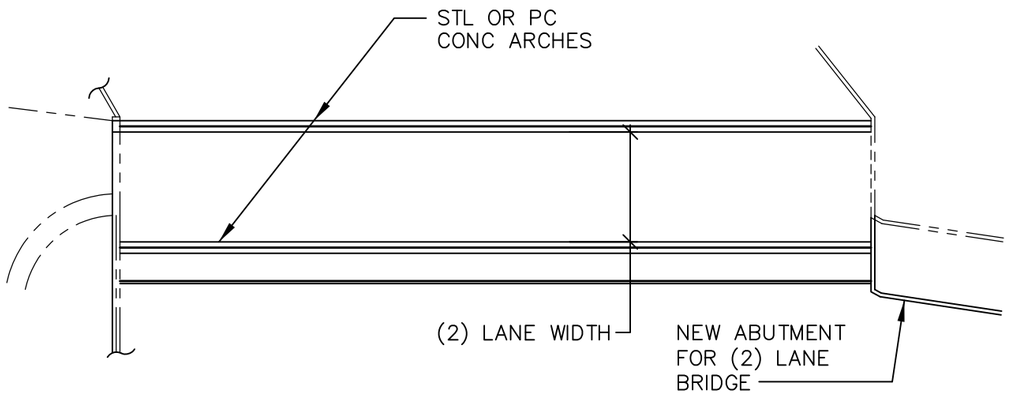


## PLAN

SCALE: 1" = 40'–0"

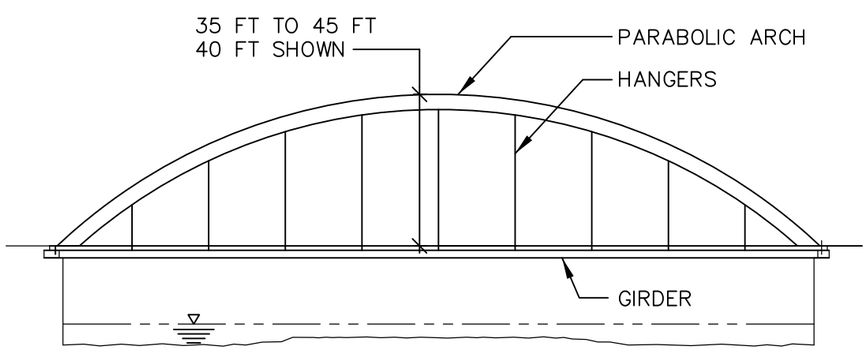


## ELEVATION (LOOKING WEST)

SCALE: 1" = 40'–0"

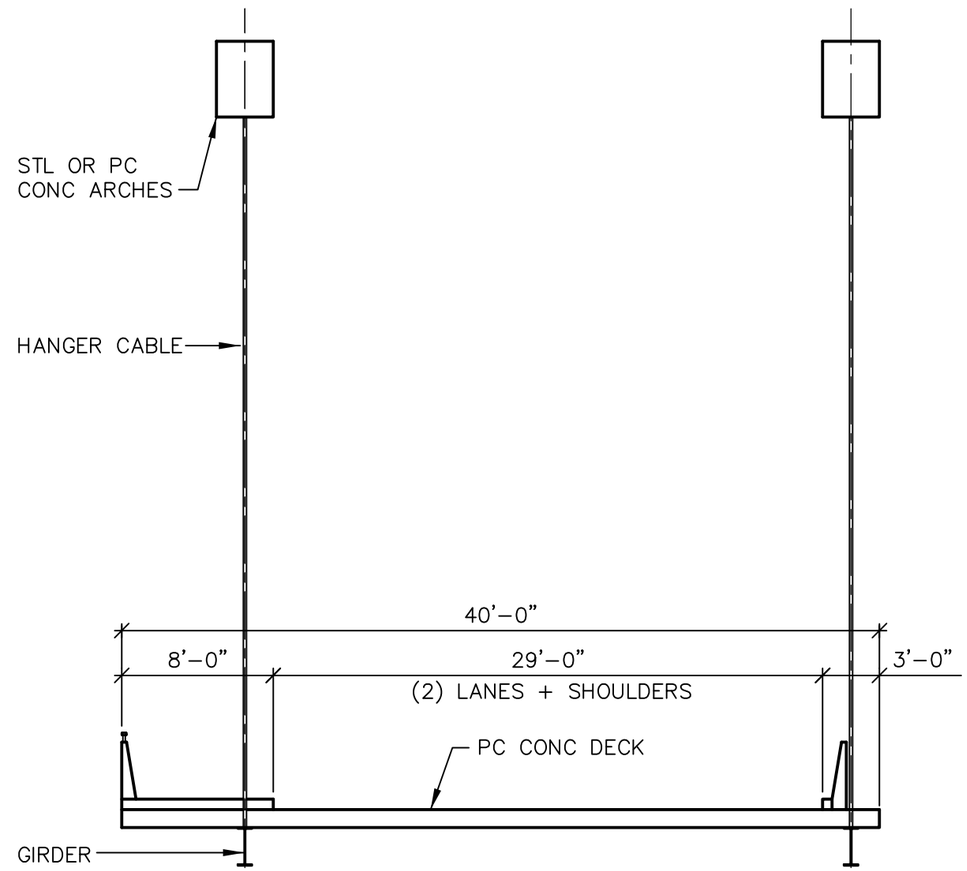


## TRANSVERSE SECTION

SCALE: 1/8" = 1'–0"

PROJECT: STUYVESANT FALLS BRIDGE
OVER KINDERHOOK CREEK

SUBJECT: NEW TRUSS BRIDGE
(ALTERNATES 5B, 5D)

DATE: July 19, 2013

DWG BY: GRG CHK BY: MGY

JOB NO.: 4487.1 PAGE: SK-3

© 2013 Ryan-Biggs Associates, P.C.

RYAN-BIGGS ASSOCIATES, P.C.
257 Ushers Road
Clifton Park, NY 12065
p 518 406.5506
f 518 406.5514
www.ryanbiggs.com

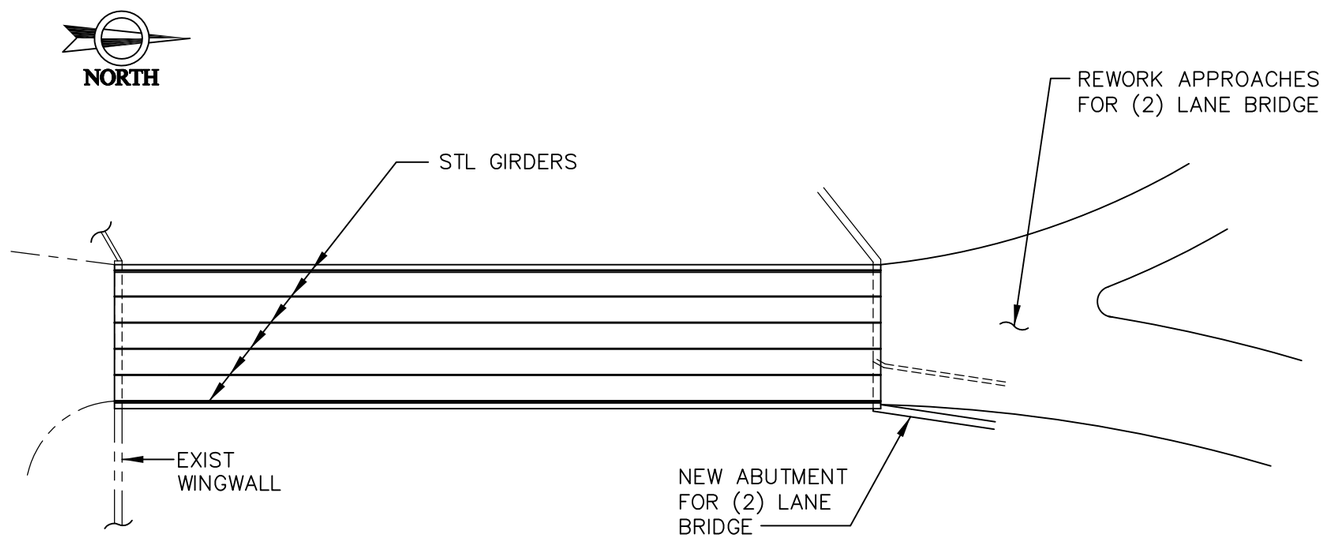


## PLAN (2–LANE SHOWN)

SCALE: 1" = 40'–0"

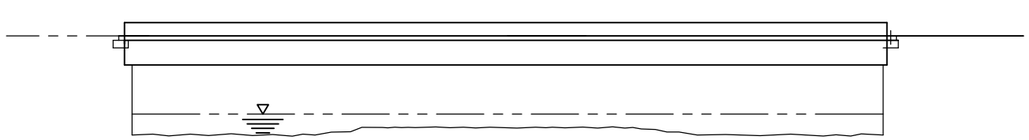

## ELEVATION (LOOKING WEST)

SCALE: 1" = 40'–0"

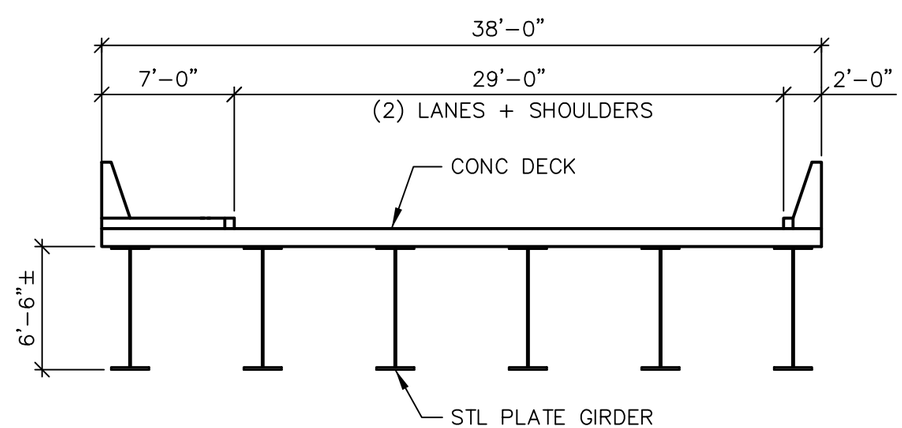


## TRANSVERSE SECTION

SCALE: 1/8" = 1'–0"

PROJECT: STUYVESANT FALLS BRIDGE
OVER KINDERHOOK CREEK

SUBJECT: NEW STEEL GIRDER BRIDGE
(ALTERNATE 5C)

DATE: July 19, 2013

DWG BY: GRG CHK BY: MGY

JOB NO.: 4487.1 PAGE: SK-4

© 2013 Ryan-Biggs Associates, P.C.

RYAN-BIGGS ASSOCIATES, P.C.
257 Ushers Road
Clifton Park, NY 12065
p 518 406.5506
f 518 406.5514
www.ryanbiggs.com

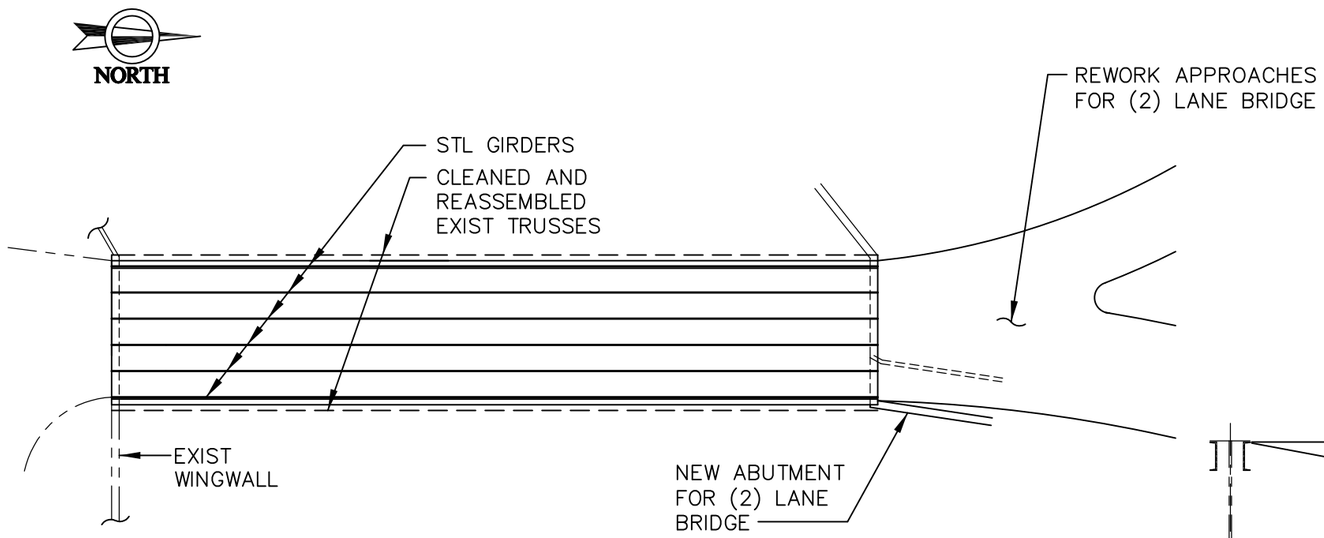


## PLAN (2–LANE SHOWN)

SCALE: 1" = 40'–0"

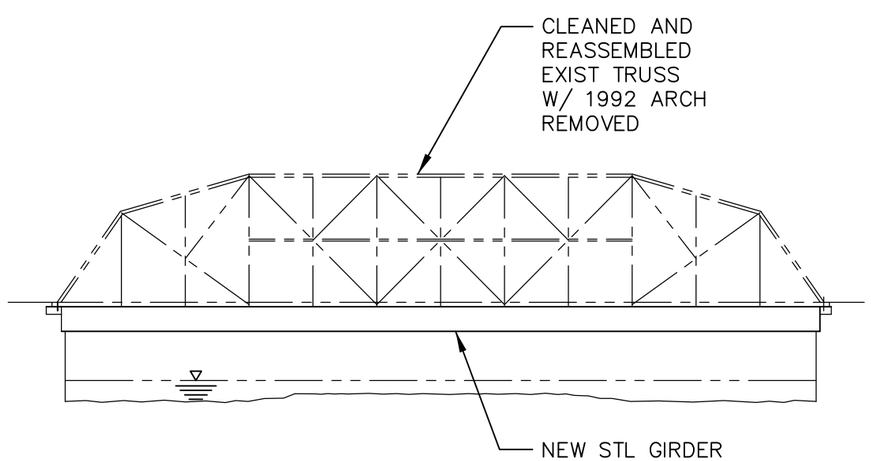


## ELEVATION (LOOKING WEST)

SCALE: 1" = 40'–0"

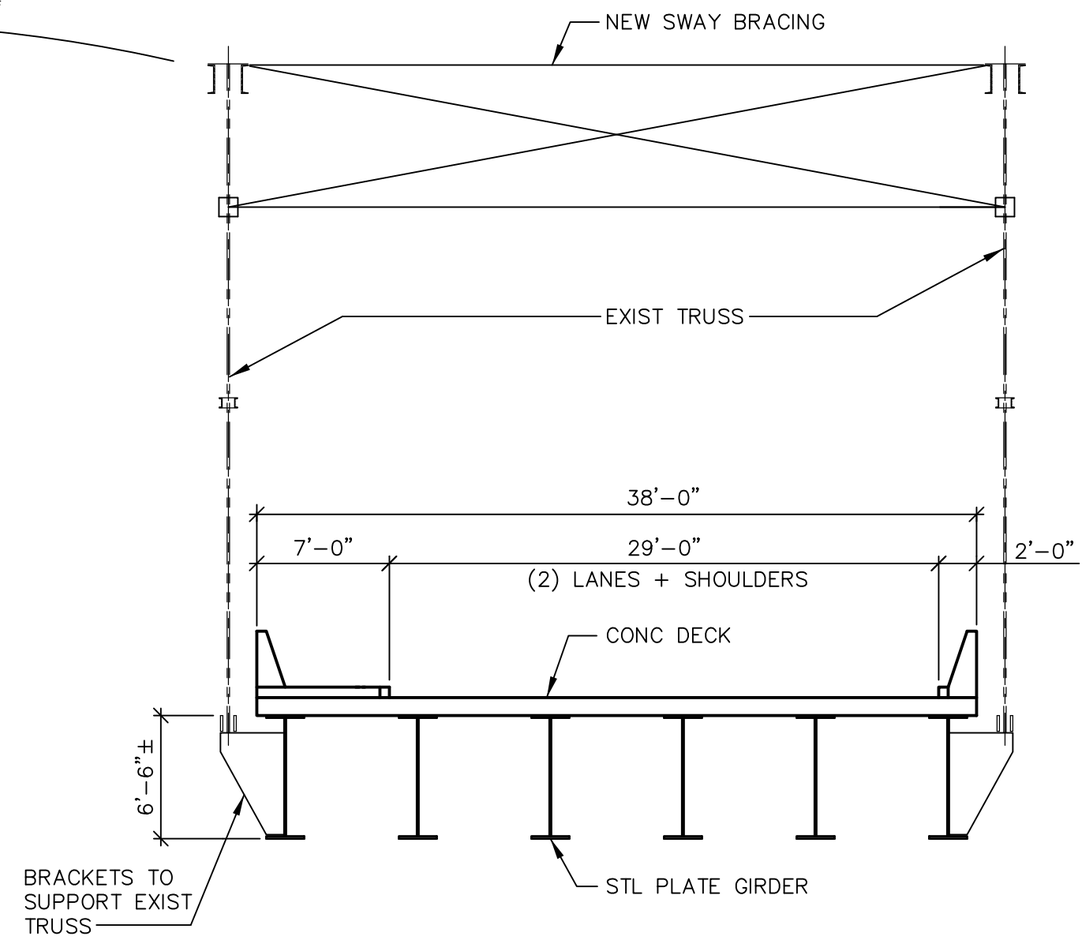


## TRANSVERSE SECTION

SCALE: 1/8" = 1'–0"

PROJECT: STUYVESANT FALLS BRIDGE
OVER KINDERHOOK CREEK

SUBJECT: NEW STEEL GIRDER BRIDGE
SUPPORTING EXISTING TRUSSES
(ALTERNATE 6)

DATE: July 19, 2013

DWG BY: GRG CHK BY: MGY

JOB NO.: 4487.1 PAGE: SK-5

© 2013 Ryan-Biggs Associates, P.C.

RYAN-BIGGS ASSOCIATES, P.C.
257 Ushers Road
Clifton Park, NY 12065
p 518 406.5506
f 518 406.5514
www.ryanbiggs.com